THE OKONITE COMPANY
Ramsey, New Jersey 07446



TYPICAL DRAWINGS AND INSTALLATIONS INSTRUCTIONS FOR OILOSTATIC CABLE SYSTEMS

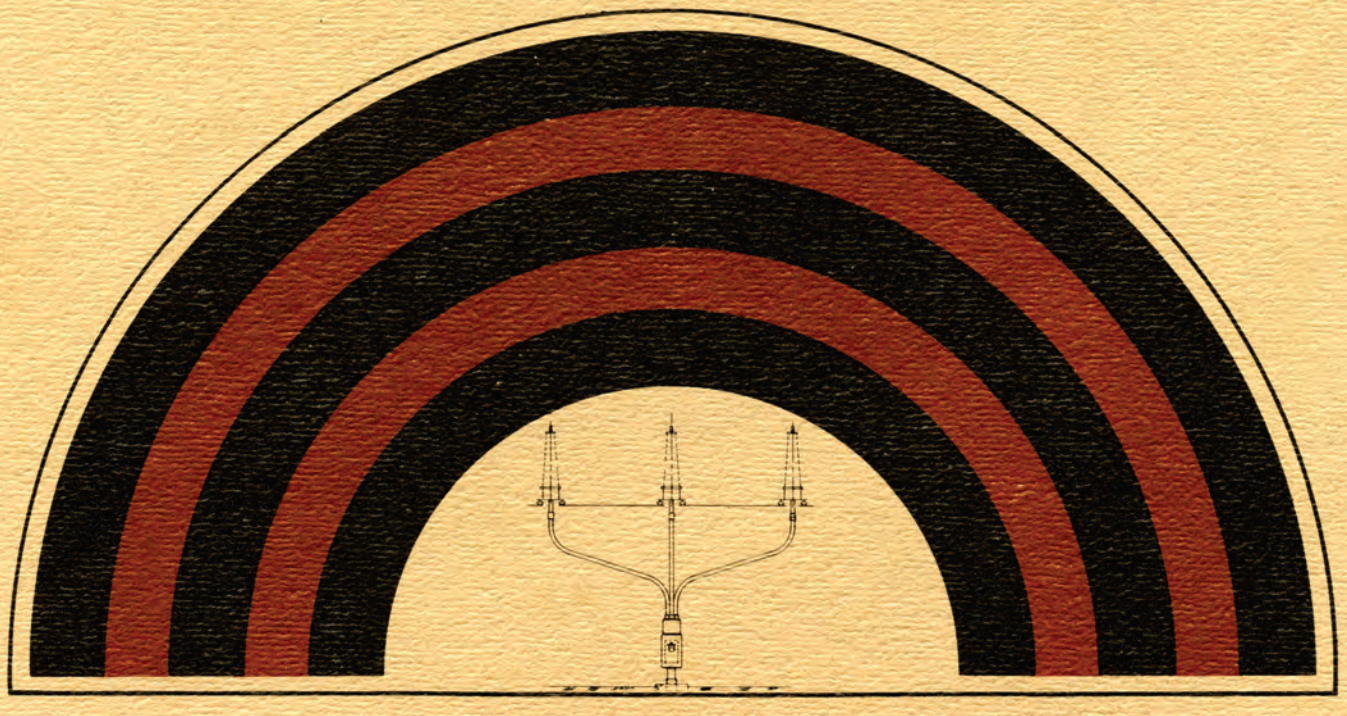

THE ENCLOSED OKONITE DRAWINGS AND INSTALLATION INSTRUCTIONS ARE THE PROPERTY OF THE OKONITE COMPANY AND ARE MADE AVAILABLE TO YOU AT NO COST TO AID AND ASSIST YOU IN THE PREPARATION AND/OR EVALUATION OF SPECIFICATIONS, BIDS, AND THE LIKE WHICH UTILIZE OILOSTATIC CABLE SYSTEMS. ANY OTHER USE OF THESE DRAWINGS AND INSTALLATION INSTRUCTIONS IS PROHIBITED WITHOUT THE EXPRESS WRITTEN CONSENT OF THE OKONITE COMPANY.

TABLE OF CONTENTS

SECTION 1 - PIPE

Pipe Installation Instructions

OS-4338 - Field Flare
OS-4339 - Chill Ring
OS-4435 - Flare Out Tool
OS-4436 - Test Cap
OS-5722 - Pipe End Flare

SECTION 2 - TERMINATION ASSEMBLIES

Termination Assembly Installation Instructions

OS-5467 - Typical Termination Assembly - Angle Type
OS-7010 - Typical Below Ground Termination Assembly
OS-7011 - Typical Above Ground Termination Assembly
OS-7265 - Assembly - Weld Type Spreaderhead

SECTION 3 - INSTALLATION INSTRUCTIONS

Cable Installation Instructions

OCS____ - Typical Cable Cross Section
OS-5470 - Cable Pulling Yoke
OS-6626 - Pulling Bolt Assembly
OS-6354 - Trailing End Eye Assembly
OS-7210 - Sealing Arrangement - Shipping Reel
OS-7211 - Reel Details and Dimensions

SECTION 4 - NORMAL JOINTS

Normal Joint Installation Instructions

OS____ - Typical Splice (Copper)
OS____ - Typical Splice (Aluminum)
OS-4285 - Assembly-Installation Equipment Pipe & Cable Joint
OS-7001 - Assembly - Normal Joint
OS-7016 - 3-Piece Normal 230 kV Joint

SECTION 5 - POTHEADS

PRL5-70-5A - Typical 69 kV - 92 kV - 115 kV (G&W)
PRL5-70-5 - Typical 138 kV - 161 kV (G&W)
Q10029 - Typical 230 kV (Ohio Brass)
Q10025 - Typical 345 kV (Ohio Brass)

SECTION 6 - PIPE FILLING OIL

Properties of Polybutene and Naphthenic Pipe Oils
Temperature vs. Viscosity Charts for Pipe Oils

SECTION 7 - FINAL EVACUATION AND OIL FILLING

Final Evacuation and Oil Filling Instructions

SECTION 1

PIPE INSTALLATION

POLYETHYLENE COVERED PIPE

1.0 SCOPE

The intent of this specification is to cover The Okonite Company's recommended practice for the field handling, installation, and testing of the steel pipe and its corrosion protective covering used in pipe-type cable systems.

2.0 PIPE DESCRIPTION

Pipe furnished shall be in accordance with ASTM Specification A 523, latest revision, titled "Plain End Seamless and Electrical Resistance Welded Steel Pipe for High Pressure Pipe Type Cable Circuits". Pipe shall be "Grade A". The lengths shall be double random lengths averaging not less than 40 feet. Each length shall be flared so as to be suitable for welding with Chill Rings. Each pipe flare shall be uniform with a 5° concentric inside taper to a diameter equal to the original O. D. of the pipe as shown on Okonite Drawing OS-5722. A chart is enclosed at the end of this section to give outside diameter and wall thickness of pipe recommended for use on normal pipe-type cable installations.

3.0 REQUIREMENTS FOR PIPE COATING

3.1 PIPE CLEANING

The interior and exterior surfaces of the pipe shall be pre-heated, thoroughly dried, and steel grit blasted or sand blasted to remove all moisture, mill scale and other foreign matter, then cleaned of residue before applying any primer or coating.

3.2 PIPE EXTERIOR

After cleaning as specified above, the external surface of the pipe shall be coated with a layer of adhesive followed by a layer of high density polyethylene (Pritec, X-Tru-Coat, or equal). At the ends of the pipe approximately six inches shall be left free of all coating materials. The approximate O. D. over the pipe and coating may be determined from the specification chart at the end of this section.

The pipe is then flared with a 5° taper for use with a Wedge Protector Type P-421 chill ring as shown on Okonite's drawing OS-4339.

3.3 PIPE INTERIOR COATING

The interior surface shall be thoroughly cleaned of any loose foreign matter and spray or brush coated with Dearborn Endcor 745 Epoxy coating.

When the interior coating is dry, the ends of the pipe shall be sealed off with suitable caps or plugs to prevent entrance of moisture and foreign matter. The caps or plugs shall be vented to prevent buildup of internal pressure. If wood plugs are used, these shall be sealed in place with tape.

3.4 PIPE COATING TEST

The completed coating on the exterior of the pipe shall be tested before shipment with a Holiday Detector. This test shall be made only after the pipe coating is dry. Lengths failing this test shall be repaired and retested to ensure passage before shipment.

4.0 PIPE AND COATING WEIGHTS

(See Attached Table)

5.0 INSTALLATION AND TESTING EQUIPMENT NECESSARY

Before the installation of pipe is started, the equipment required to carry out the work efficiently should be available at the job site. The following special tools and equipment are recommended for pipe installation and testing.

Pipe Pressure Caps for temporarily sealing the pipe during installation. (See OS-4436)

Dew point measuring device

Dry nitrogen for storage and high pressure testing of pipe

Jacks with collar for pulling pipe lengths together

Hoists for handling pipe

Pressure gauges for 30 and 500 lbs. per sq. inch

Propane for Butane torches for applying heat shrinkable joint sleeves.

H. C. Price Model CE-7, Spy 400, or equal Holiday Detector

Valves for 1000 lbs. pressure

Nitrogen gas pressure regulators for 1000 lbs. per sq. inch

Nitrogen gas pressure regulators for 60 lbs. per sq. inch

Standard welding equipment

Pipe cutter

"A" Frames for lowering pipe into trench

Trailer truck for transportation of steel pipe

Small crane or boom truck for loading steel pipe and lowering same in the trench

Pipe sling, steel hooks or steel caps for lifting pipes

Rubber mats, sandbags, straw bags, or equal for temporary bedding of pipe.

Flaring tool for rounding pipe ends. (See OS-4435)

12 pound sledge hammer

Vacuum pump (approximately 100 CFM), trap tank, and 20 ft. of 2" vacuum hose

Vacuum gauge (0 to 5000 microns)

Pipe coating insulation megger

Trichloroethylene Solvent 1, 1, 1 inhibited grade

Pipe grinder for pipe ends

Steel wire brushes for cleaning pipe ends.

6.0 PIPE HANDLING

Any transit damage to the pipe or pipe coatings as received must be immediately reported to the carrier. Pipe shall be unloaded, handled, stock-piled, hauled and installed in a manner that will protect the coating against damage. The coated pipe should be at all times supported on suitable protective padding until it is finally installed in the trench. It may be stored, however, on a level pad of sand not less than 6 inches deep and nested no more than 6 layers high with padding. The number of tiers is dependent on the size of the pipe and the expected temperature conditions at pipe handling locations.

In very warm weather, the coating can soften and flatten thus reducing the thickness and insulation resistance. In freezing weather, protection must be given to coating to prevent it from freezing to the ground thus preventing removal without damaging the coating. No chains or ropes shall be allowed to come in contact with the pipe coverings during handling operations.

CAUTION: Polyethylene is a rugged coating but it will damage if subjected to abuse or not shielded from sharp objects.

7.0 STEPS AND SEQUENCE OF OPERATION

Installation and testing of the pipe can be broken down into the following number of steps. These steps pertain to the usual practice of welding successive lengths of pipe above the trench. However, due to the presence of services or other obstructions across the excavation, it may be necessary to make some welds after the pipes have been positioned in the trench. (See Para. 13.0). Steps are given in logical sequence but do not have to be conducted separately. Each operation may be going on at the same time at various locations along the route. Assuming the route has been determined and all materials are on hand, the following steps shall be taken:

7.1 Test all polyethylene coating on pipe, inspect the interior coating for dirt and condensation, cleaning if necessary.

7.2 Dig trench for pipe

7.3 Weld steel pipe

7.4 Radiograph test pipe welds

7.5 Apply heat shrinkable sleeves to pipe joints.

7.6 Test full length of coating including joints

7.7 Lay pipe in trench

7.8 Back fill trench.

8.0 PIPE TRENCHING

Make ready all necessary material and labor for trenching, shoring, bridging, tunneling under railroad tracks, back-filling trench, etc.

Excavate pipe trench to correct dimensions as required for pipe installation. The depth may vary from 3 ft. to 10 ft. or more depending upon findings at time of excavation. The desirable minimum coverage is 3 ft.

The bottom of the trench shall be smooth, uniform and free from rocks, stones or other foreign matter. Nothing shall be left in the

bottom of the trench which might damage the pipe coating. When the presence of rock or other conditions prevent a satisfactory bed for the pipe, at least 6 inches of clean sand shall be back filled on the bottom of the trench and well tamped around the pipe. Wherever acid, soil, ashes, cinders or other injurious materials are encountered in the trench, the pipe should be embedded on all sides in one foot of the screened sand. The pipes shal be installed so as to eliminate contact with any types of obstruction. A minimum of 6" clearance and preferably more should be maintained between the pipe and any obstructions. Where services or other obstructions are encountered near the bottom of the trench, it is required that the trench be graded for a sufficient distance on both sides to allow the pipe to lay of its own accord without field bending to prevent contact with services or obstructions.

Remove all excess earth and clean up.

9.0 INSTALLATION HANDLING OF PIPE

For bends with a radius of approximately 75 feet or more, the pipe can be trained to conform without machine bending. Bends of shorter radii shall be made with suitable bending equipment. During bending operations, adequate measure shall be taken to prevent damage to the pipe coating. An electric Holiday detector voltage set at 10 kV shall be used to detect faults in the polyethylene coating. The electrode for applying this test shall be a rolling spring that will completely encircle the pipe, so arranged that it will contact the pipe coating. Tests with a Holiday detector shall be made only when the pipe coating is dry and in the presence of the supervising engineer or his representative. If any holes in the coating are found, it is good practice to circle the fault with marker pen so that those doing repair work will know their exact location. Patching of the coating is done with heat shrinkable sleeves or polyethylene tape. Retest all repairs.

It is recommended that a suitable wide belt type sling be used in handling the pipe above the trench for position welding. A suitable belt sling is one that has a width equivalent to the outside diameter of the coated pipe, and of sufficient length to avoid contact between its end links and the coating. In the removal of the belt sling from under the coating, care should be exercised to avoid dragging the free end link against the coating if the sling does not have a removable end link. (See attached diagram of typical belt sling.) Pipe lengths should be bedded on staw bags or rubber sheets and transported on trucks or trailers to the trench. The individual pipe lengths should not be rolled directly from the truck to the ground. The pipe may be rolled down skids of at least 8 inch width when the pipe is

restrained by a rolling hitch. The pipe may be layed on timbers or saddles over the trench. There should be bedding for the pipe on timers. A rubber or canvas mat, straw bags, or sand bags will be satisfactory. The pipes are to be laid over the trench with ends butted, to form a continuous pipe line. The caps or plus are removed from the ends of two adjacent pipe lengths, the ends examined for roundness and a chill ring inserted to check for dimensions of the flared end. The opening of the chill ring should not exceed 1/8 inch unless approved by the supervising engineer. If the end of the pipe is not round or the chill ring collar does not fit up to the end of the pipe, the end of the pipe should be flared to meet these requirements. A steel mandrel should be used for this purpose and should be forced into the end of the pipe with a sledge hammer. At this time, the inside of the pipe end should again be examined. If there is dirt or rust, the pipe end is to be cleaned.

Pipe shall be lowered into the trench in a manner that will not damage the coating. Where it is necessary to pull pipe into or along the bottom of the trench, suitable rollers, straw bags or other means shall be used to prevent damage to the coating. The leading edge of the coating should be temporarily protected to prevent damage during the pipe pulling operation. Where coated pipe is installed in a sleeve, spacers shall be used to support the pipe through the sleeve.

CAUTION: The pipe coating will normally resist damage; however, it is recommended that great care be exercised in handling as indicated under Para. 6.0 to prevent damage in the field.

10.0 WELDING

The edge of the pipe should be lceaned with a steel brush to facilitate welding. A pipe end with, and a pipe end without a chill ring, shall be brought together, aligned and securely clamped so that the axis of the pipes coincide and so that the space between the pipe ends is not greater than 7/32" nor less than 3/16" at any point around the circumference of the pipe. This shall be accomplished in a manner that will insure against canting or stressing of the chill ring. The opening of the chill ring shall not be more than 1/8". Care should also be taken to insure that the chill ring, in its final position in the trench, shall have the opening 90° off the vertical perpendicular of the pipe.

The chill ring opening should not be located on the inside of a bend in the pipe. Welding of the pipe shall begin and once begun, welding shall proceed continuously until all passes have been completed.

All welding shall be performed and all welders qualified as prescribed in American Petroleum Institute Specification #1104 Standard for Field Welding of Pipe Lines, latest edition, except burn-throughs are not permitted under any circumstances.

In general, all welds shall be not less than three pass electric welds, and the filler material shall conform to A.W.S. Class E-6010 welding rod and shall be Fleetwood #5 or equal. It is recommended that the first two passes be made with 1/8 inch rod and the third with 5/32 inch rod. The current required will be approximately as noted below:

1/8 inch rod	-	90 - 100 amps
5/32 inch rod	-	110 - 120 amps

These values are approximate only and can be varied to give best results.

Pipe ends shall not be left open in the trench. All open ends of the pipe shall be sealed with an air tight pressure cap and the pipe filled at a pressure above atmospheric and kept filled with dry nitrogen to a pressure of 1/2 psi per foot of maximum burial depth but not less than 5 psi.

It is also recommended that a small continuous flow of nitrogen be passed through the pipe while it is being worked on. This can be accomplished by connecting a nitrogen cylinder to the remote end of the section. A small amount of nitrogen (one bottle or less for an eight hour shift) can be bled in through the 1/2 inch pipe fitting in the test cap. This operation will help to carry off moist air and gasses caused by welding. At night the open end should be capped and a small positive pressure maintained throughout the section.

11.0 TESTING WELDS

After the weld is completed, it is to be tested before the heat shrinkable sleeve coating is applied, by radiographic inspection in accordance with American Petroleum Institute Specification Standard #1104 (latest edition) "Standard for Field Welding of Pipe Lines," except burn-throughs are not permitted under any circumstances. The testing of the welds will be performed by a laboratory designated by the installer and at the expense of the installer. The laboratory will

submit to the installer the film of each weld for approval. Each unacceptable defect in a weld shall be removed and the joint then rewelded and reinspected.

In addition, after a section between manholes has been completed, reducers should be welded on in final positions. The test cap should then be installed and 400 to 500 psi pressure applied to the entire section for a minimum of one hour (local codes must be checked first). Either nitrogen or dried air may be used for this test.

After proof testing at this high pressure for one hour, the pressure can be reduced to approximately 275 psi. Pipe should be maintained under this pressure for 72 hours and readings taken twice a day or a recording pressure gauge used, to insure pipe is tight. Ambient temperature changes may result in some variation and should be taken into account.

12.0 COATING WELDED JOINTS

After the welds have successfully tested, carefully wire brush pipe weld area. Burrs, weld splatter, or other sharp points should be filed or peened.

Any coating not firmly bonded to the pipe should be cut away.

Remove any foreign matter from the area between the two cut back ends of the polyethylene coating. Thoroughly clean and dry the polyethylene coating for at least 8" on each side of the joint.

Slide the heat shrinkable polyethylene sleeve into place and adjust it so an equal amount of the sleeve will extend over the polyethylene pipe coating on both sides in the final shrunk position. It is recommended that a few trial runs be made on scrap pipe lengths to get the installation procedure and adjustment dimensions down pat before starting in on the actual installation.

After the sleeve has been installed and cooled, it should be tested with the Holiday Detector, same as the pipe coating.

13.0 LAYING OF PIPE IN THE TRENCH

Although it is not necessary, the usual practice is to start the laying of the pipe at a manhole. In order to have the pipe straight in the manhole, it may be laid through both sides of the manhole and cut after backfilling. This alignment of the pipes in the manhole is important since improper alignment will cause a great deal of

difficulty later when the steel joint sleeves are assembled.

If there are no transverse services through the trenches, one end of the pipe may be dropped into the trench while the other end is above the trench. Before lowering the pipe into the trench, the polyethylene coating should be given a voltage test for detection of holidays. One end of the completed pipe will lay in the trench while the other end will be above the trench. Pipe lengths are then welded to the end above the trench, which will permit additional pipe to be lowered into the trench. There should be one length straight above the ground and at least 100 feet for flexing the pipe from above the ground to the bottom of the trench.

If there are transverse services, the pipe may be welded above the ground, then lowered with the aid of "A" frames and chain blocks. Depending on the size, length of pipe, and number of lengths joined together, etc., the pipe can be moved under services by a pulling winch, hoist or other suitable means. The pipe is then pulled into final position by means of clamps around each pipe and jacks. To facilitate welding, extra soil should be dug out around the joint to permit the welder to get under the pipe.

In order to be able to use two welders at one location, one welder may be welding two lengths together while the other is welding two previously jointed pipe lengths to the pipe in the ground or pipe to be laid in the ground.

14.0 FINAL TESTING OF COATING BEFORE BURIAL

Before placing pipe in position in the trench, the polyethylene coating on the welded pipe, including coated joints shall be tested in the manner already described. Coating areas shown by this test to be defective shall be immediately repaired and retested until found to be satisfactory. It is also recommended that a final check for holidays in the coating be made prior to backfilling if the pipes are left exposed in the trench for any unusual length of time.

15.0 BACKFILLING THE TRENCH

The Engineer will determine whether the excavated materials shall be used as backfill. All backfill shall be clean and free of any stones or objects that may damage the pipe coating. Backfilling material within one foot of the pipe shall be clean sand for best thermal characteristics. Other backfilling material shall be free of stones greater than 12 inches of their maximum diameter.

Hand tamping is required for the first 12 inches over coated pipe after which machine tamping may be used. Backfill must be thoroughly compacted.

Sand backfill may be compacted by flushing. When the flushing method is used, backfill to one foot above the pipe. Flush about the pipe and allow the pipe to settle before adding more fill. Backfill material, above the first layer, should be flushed in 2 foot layers to the top of the trench.

16.0 ACCEPTANCE TEST OF PIPE COATING

After each manhole to manhole section of pipe has been installed and the trench is backfilled the Engineer will measure the insulation resistance of the polyethylene coating with a suitable insulation tester. This test may not necessarily be made immediately after the backfill is complete but will be made prior to pavement installation. If the insulation resistance is less than 10 megohms per square foot of pipe surface area, an overground survey should be made to locate any points which might have low insulation resistance. The contractor shall expose the pipe at such point or points, and make the necessary repairs to the coating.

The 10 megohms value is not to be considered as a minimum acceptance coating value, but instead only a dividing line to determine whether or not an overground survey should or should not be made.

17.0 PIPE JOINT REDUCERS

Refer to the assembly drawing of the straight normal joint prior to installing reducers on the pipe in the manhole. Determine the exact location to install the reducers and cut the pipe using a pipe cutter in a manner so as not to reduce the inner diameter of the pipe and still leave a clean cut in a plane perpendicular to the axis of the pipe. After removal of the cut section of pipe, position the two reducers in place and align in position. It is important that these reducers be squared off to pipe, and aligned properly with respect to each other so that the sleeves will slide into position without binding.

NOTE: There are times when the ends of the pipe will spring apart after a section is cut off for installing pipe joints. In these cases, it is recommended that a jacket be used to keep both cut ends of the pipe in alignment. Recheck the alignment and spacing required between the face of both reducers. Weld both reducers in position and secure the test gaps in place to seal up the section of pipe.

18.0 PIPE DRYING

As soon as the two ends of a pipe section are accessible, the section shall be evacuated to an absolute pressure of 75 microns or less of mercury. After reaching 75 microns, the vacuum pump shall be kept running for a minimum of four more hours. It is preferable to take this vacuum reading at the end opposite from the vacuum pump, if only one vacuum pump is used. After completion of the 4-hour pumping period, the vacuum pump shall be stopped and isolated from the line, and a vacuum drop test run at the end of the section where the vacuum pump is located. If the rise in pressure in one hour, after isolating the vacuum pump, exceeds 75 microns, the vacuum treatment shall be repeated. When the vacuum test is acceptable, the vacuum shall be broken by admitting super dry nitrogen (minus 67 F dew point) to a 7 to 10 pound positive pressure and maintained at this pressure until the entire line is accepted by the engineer. If the pressure in any section is reduced to 0 psi, the entire evacuation procedure shall be repeated before the line is re-pressurized.

19.0 PIPE TERMINATIONS

Each end of the pipe cable system shall terminate above ground in a spreaderhead assembly or below ground at a trifurcating assembly. Each of the three cables continue from there in separate non-magnetic stainless steel riser pipes to the terminals (potheads) on the terminal structure. It is suggested that the related drawings be studied and understood before starting this phase of the work.

19.1 ABOVE GROUND SPREADERHEAD TYPE

A 90° pipe bend assembly is furnished to make this transition between the buried pipe and the spreaderhead assembly in above ground terminations. It is necessary to position this pipe bend to suit the terminal location.

Anchors and/or concrete footings may or may not be used depending on local soil conditions and pipe circuit routing. The pipe bend has a flared end at the bottom to accommodate a chill ring for welding to the adjacent pipe. The top of the pipe has a straight end and is cut in the field to fit into the bottom of the spreaderhead. After the welding has passed the required examination and the joint covered with a heat shrinkable sleeve, the entire pipe bend and joint shall be tested for holidays as described before. Assuming there are no holidays, the concrete footing (if used) can be poured. Extreme care should be exercised not to damage the poly-

ethylene while building the form of pouring concrete. After the concrete has set sufficiently, the spreaderhead can be located in position but not welded yet. The riser pipes and pothead baseplates should be prefitted, adjusted and assembled in their final positions prior to final welding and assembly. The riser pipe bends are furnished with a little extra length in order that they may cut in the field to suit during final assembly. These riser pipes should be swabbed thoroughly prior to final assembly.

19.2 BELOW GROUND TRIFURCATING ASSEMBLY

Trifurcating assemblies are supplied with non-magnetic stainless steel riser pipes for each cable to go from the trifurcator to the pothead basepates. These pipes are bent to fit the particular installation. No concrete footing is needed for this type of installation. It is recommended that the stainless steel pipes be wrapped with two half-lapped layers of polyethylene tape or equal to provide corrosion protection. Pipe surfaces to be wrapped must be clean and dry. Oil and grease, if present, should be removed with rag and suitable solvent. Smooth any burrs on coupling welds before taping. Apply one wrap of tape over coupling ends for extra protection before taping entire pipe.

20.0 OIL SUPPLY PIPING

Oil piping should be 2" Schedule 80 Extra Heavy (.218" wall thickness) steel pipe per ASTM A53, A120, or equal. Fittings should be 2000 lb. forged socket weld type. The pipe and fittings must have an external corrosion covering such as extruded polyethylene, or taped polyethylene in all buried portions of the run.

All welds in the oil interconnecting piping should be checked with gas pressure and "Leak Tec" or soap solution prior to covering with the corrosion protective covering.

21.0 PROCEDURE AND SEQUENCE OF OPERATIONS

The instructions give in this manual are intended to cover what might be considered a typical pipe-type cable installation. They are not intended to cover every condition which might occur on every installation. It should be recognized that each installation has its own special characteristics and features. Thus, these instructions can be modified or interpreted to cover contingencies at the discretion of the Okonite Field Advisor and/or the owner's Engineering Department Representative.

JTZ/row
3/78

SPECIFICATIONS FOR POLYETHYLENE COATED PIPE

FOR PIPE-TYPE CABLE INSTALLATION

NOMINAL PIPE SIZE	4	5	6	8	10
Pipe O.D. - Inches	4-1/2	5-9/16	6-5/8	8-5/8	10-3/4
Wall of Pipe - Inches	.237	.258	.250	.250	.250
Surface Area of Bare Pipe - Square Ft./Lin.Ft.	1.18	1.46	1.73	2.26	2.82
Nominal Adhesive Thickness-Inches	.010	.010	.010	.010	.010
Nominal Coating Thickness - Inches	.040	.060	.060	.060	.060
Weight of Bare Pipe Lb./Lin. Ft.	10.8	14.7	17.0	22.4	28.0
Approx. Weight of Pipe Plus Coating LB/Lin. Ft.	11.1	15.2	17.6	23.2	29.0
Minimum End Overlap of Field Joints - Inches	2	2	2	2	2

Thermofit®

Heat-shrinkable Pipe Sleeves (TPS)

Installation Instructions

1. Before making weld, slide TPS over pipe end and position approximately one foot from weld area.

2. After welding, clean weld area in accordance with normal procedures. No solvent or primer is needed.

3. If the pipe joint is cold, preheat joint until hand warm. This will reduce shrink time and ensure good bonding.

4. Remove sleeve's inner protective release paper and center sleeve over joint, allowing a 3" overlap on the mill coating.

Adjust standard propane torch. (Raychem FH-2601 and AD-1358 regulator are recommended. Use a 22" flame for pipes smaller than 16" O.D., a 27" flame for larger pipes.

5. Heat sleeves beginning in the center. Start at the bottom and move upward on both sides. Work to one end, then the other as shrinkage occurs. Keep torch moving and apply heat evenly around sleeve.
Note: Two people working on opposite sides of the pipe are recommended for installing sleeves on pipes larger than 16" O.D.

6. Sealant exuding from both sleeve ends indicates that a permanent, waterproof joint seal has been formed, and the installation is complete.

Raychem's four types of pipe sleeves cover the full range of pipe diameters and joint types. See Raychem brochure C-151-4 for details.

Typical preheat plus installation times for a 24" long sleeve.

Pipe diameter OD	Time (min.)
Less than 6"	2
6–12"	3
12–14"	4
16–28"	5
24–36"	6
30–32"	8
36–48"	10

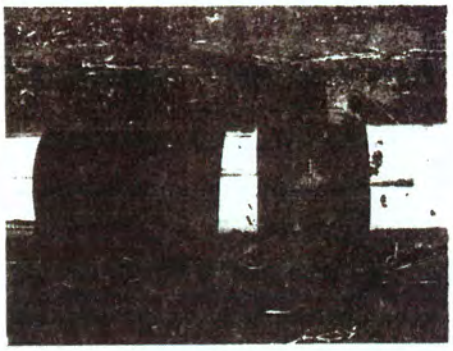
1

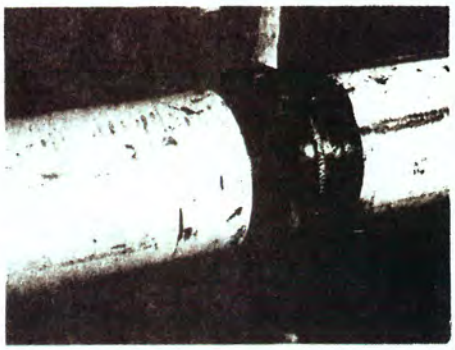
2

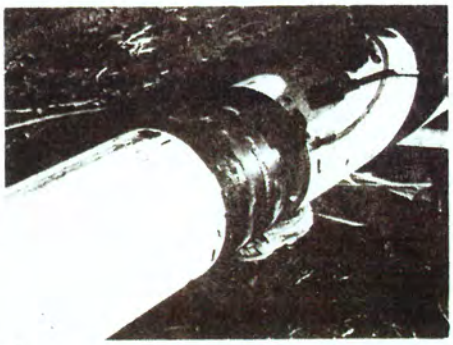
3

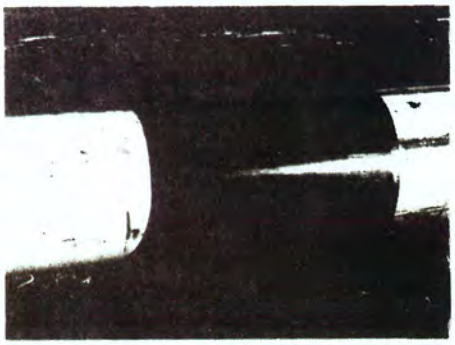
4

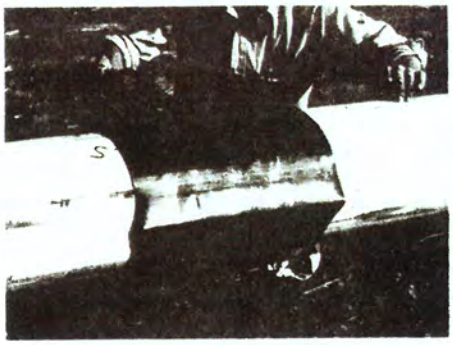
5


6

Raychem Corporation
Energy Industries Group
300 Constitution Drive
Menlo Park, California 94025
415 329-3860

Raychem

©1975 Raychem Cor n Printed in USA CI-002 1/75

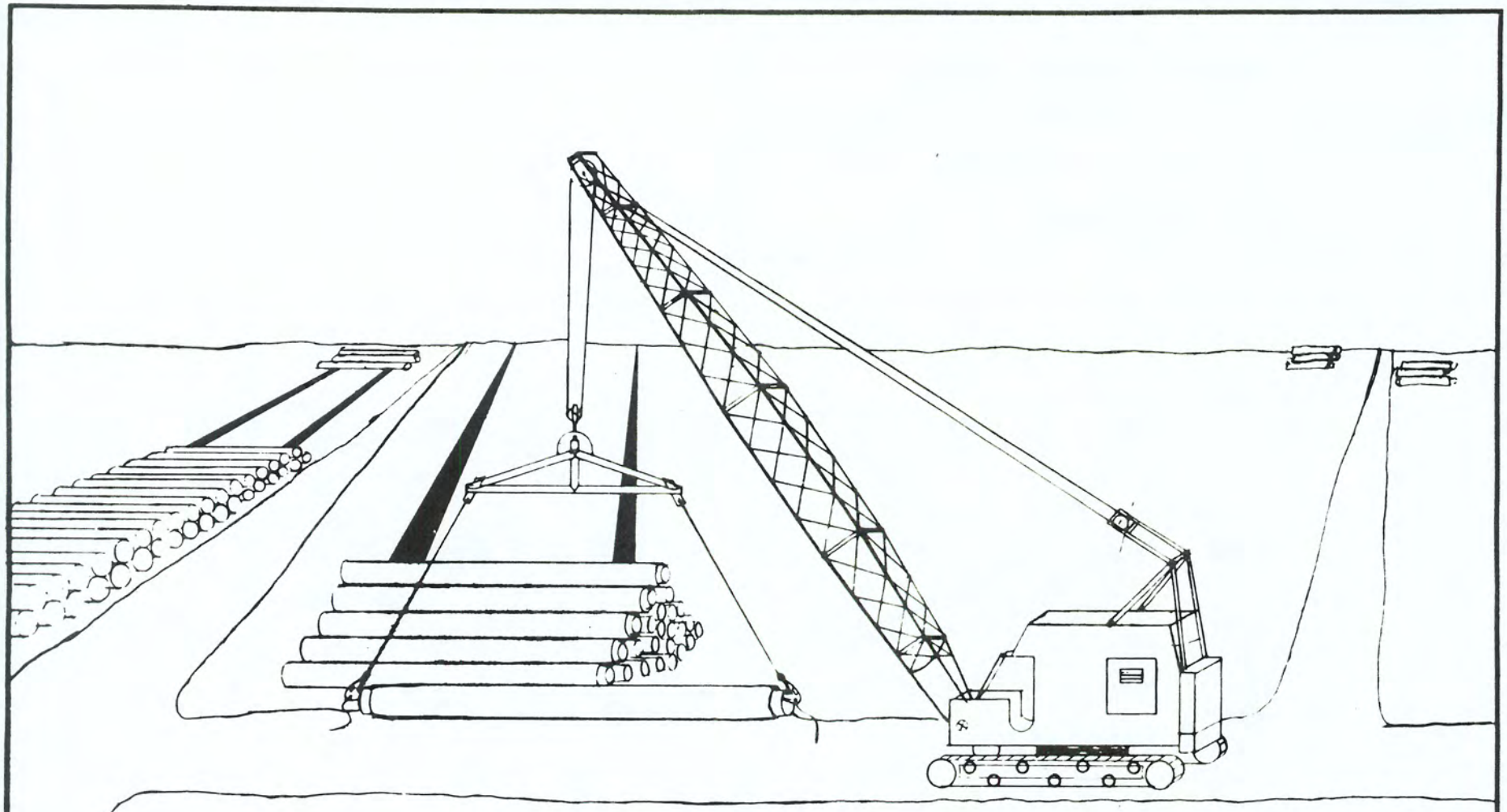

H. C. PRICE CO.

SCALE: NONE	APPROVED BY: K. J. Harris	DRAWN BY G. E. H.
DATE: 10-1945		REVISED 11-20-64

PIPE HANDLING

DRAWING NUMBER C1-1 of 6

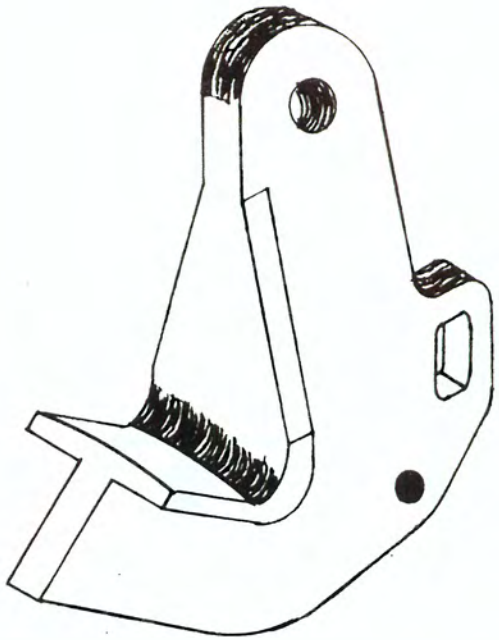

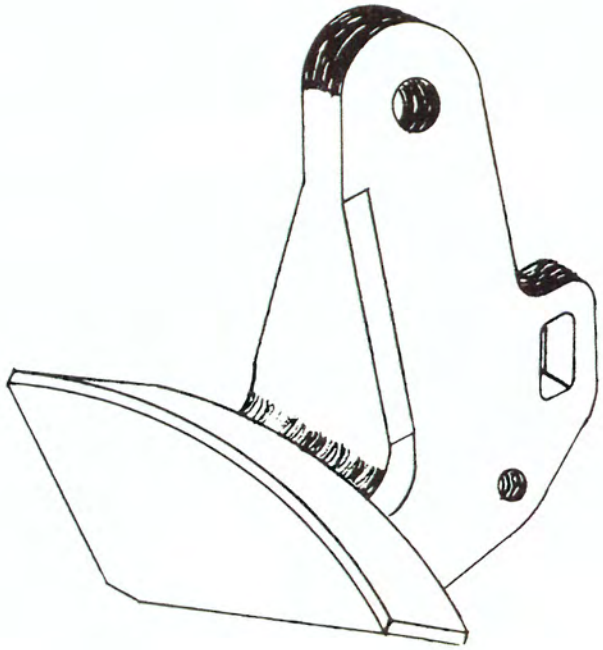

H. C. PRICE CO.

SCALE: NONE	APPROVED BY: R J Haw	DRAWN BY G.E.H.
DATE: 10-1959		REVISED 11-20-64

PIPE END HOOKS

DRAWING NUMBER 01-2 of 6

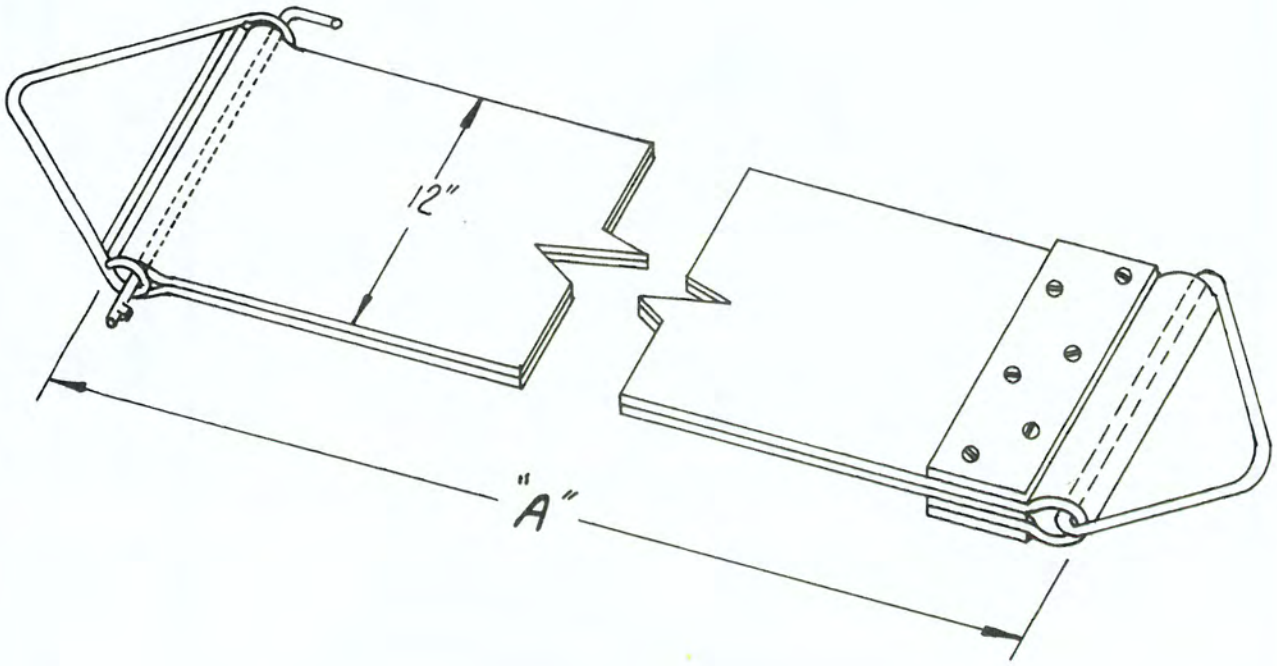

PIPE SIZE (INCHES)	LENGTH "A" (INCHES)
4	26
6	36
8	43
10	50

CONSTRUCTED OF HEAVY WOVEN BELTING FOLDED DOUBLE. BELTING ENDS ARE ANCHORED AT SOLID TRIANGLE AROUND A THIMBLE PLATE AND SECURELY BOLTED BETWEEN STEEL PLATES TO PREVENT TEARING. CAPACITY SEVEN TONS.

END TRIANGLES ARE OF WELDED STEEL CONSTRUCTION, ONE TRIANGLE HAVING REMOVABLE PIN TO ALLOW WITHDRAWAL OF SLING UNDER COATED PIPE WITHOUT DAMAGE TO COATING.

TRACED FROM PIPE LINE SERVICE CORP., FRANKLIN PARK, ILL.
SKETCH #1 - 8-14-57

PIPE HANDLING SLING

THE OKONITE COMPANY RAMSEY. N.J.. U.S.A.	DATE 2-21-62	SCALE N	REVISIONS
	DR. D.V.D.	TR. F.R.	DRAWING NO.
	CH.	APP.	OS-5326

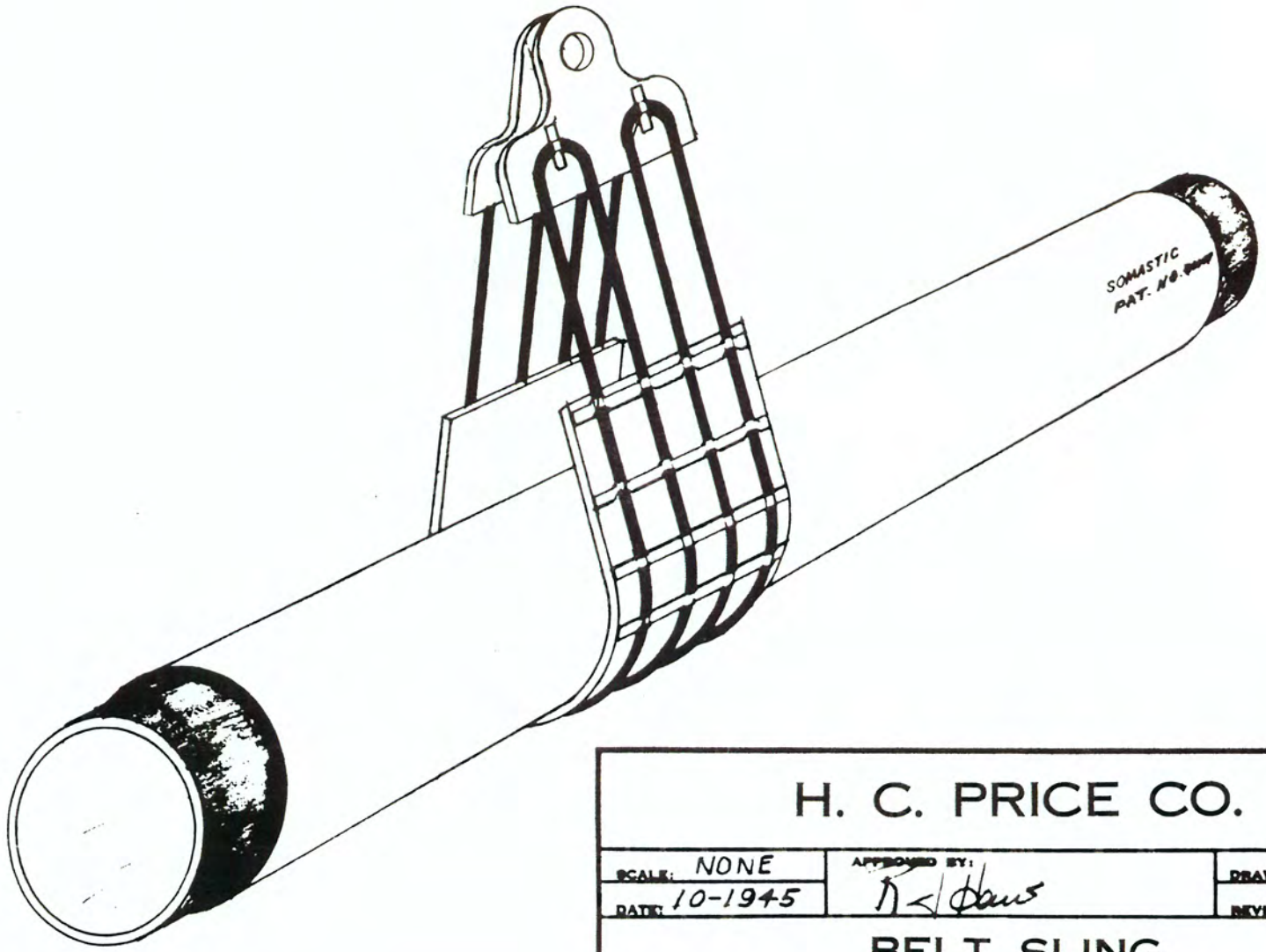

H. C. PRICE CO.

SCALE: NONE	APPROVED BY: R. C. Hans	DRAWN BY G.E.H.
DATE: 10-1945		REVISED 11-20-64

BELT SLING

DRAWING NUMBER
01-376

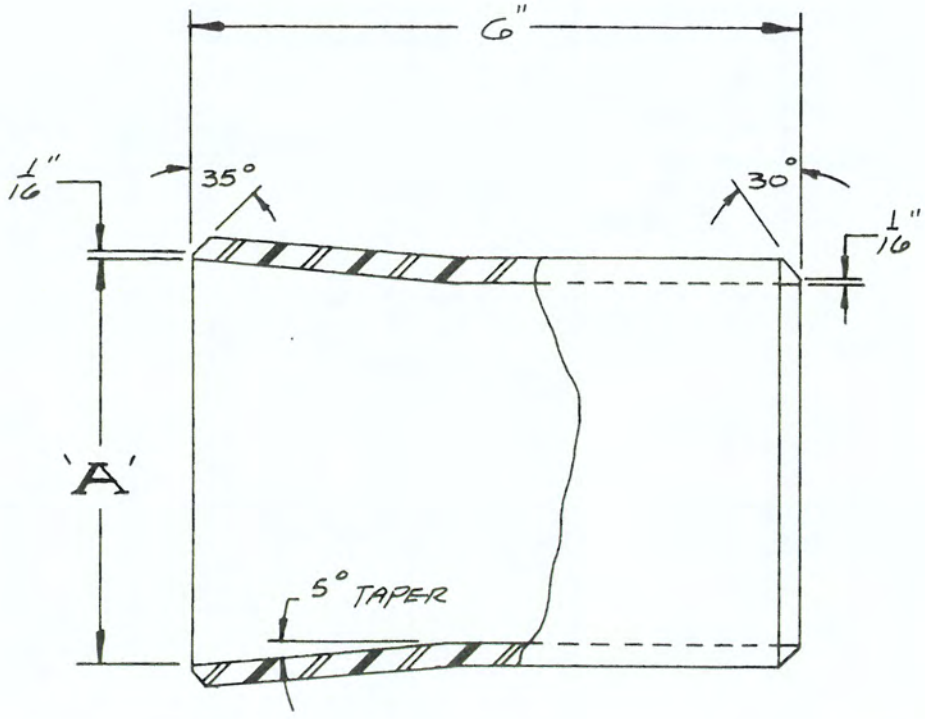

NOTE

DEPTH OF FLARE SHALL VARY WITH THICKNESS OF PIPE

FIG Nº	PIPE O.D.	DIM. 'A'
1	4 1/2"	4.500"
2	5 9/16"	5.5625"
3	6"	6.000"
4	6 5/8"	6.625"
5	7"	7.000"
6	8 5/8"	8.625"
7	10 3/4"	10.750"

"OILOSTATIC"

DETAIL - FIELD FLARE

THE OKONITE COMPANY	DATE 11-1-63	SCALE ~	REVISIONS A - 3-12-65
	DR. HRd.	TR. JKR.	DRAWING NO.
RAMSEY, N.J.	CH. HRH	APP.	05-4338

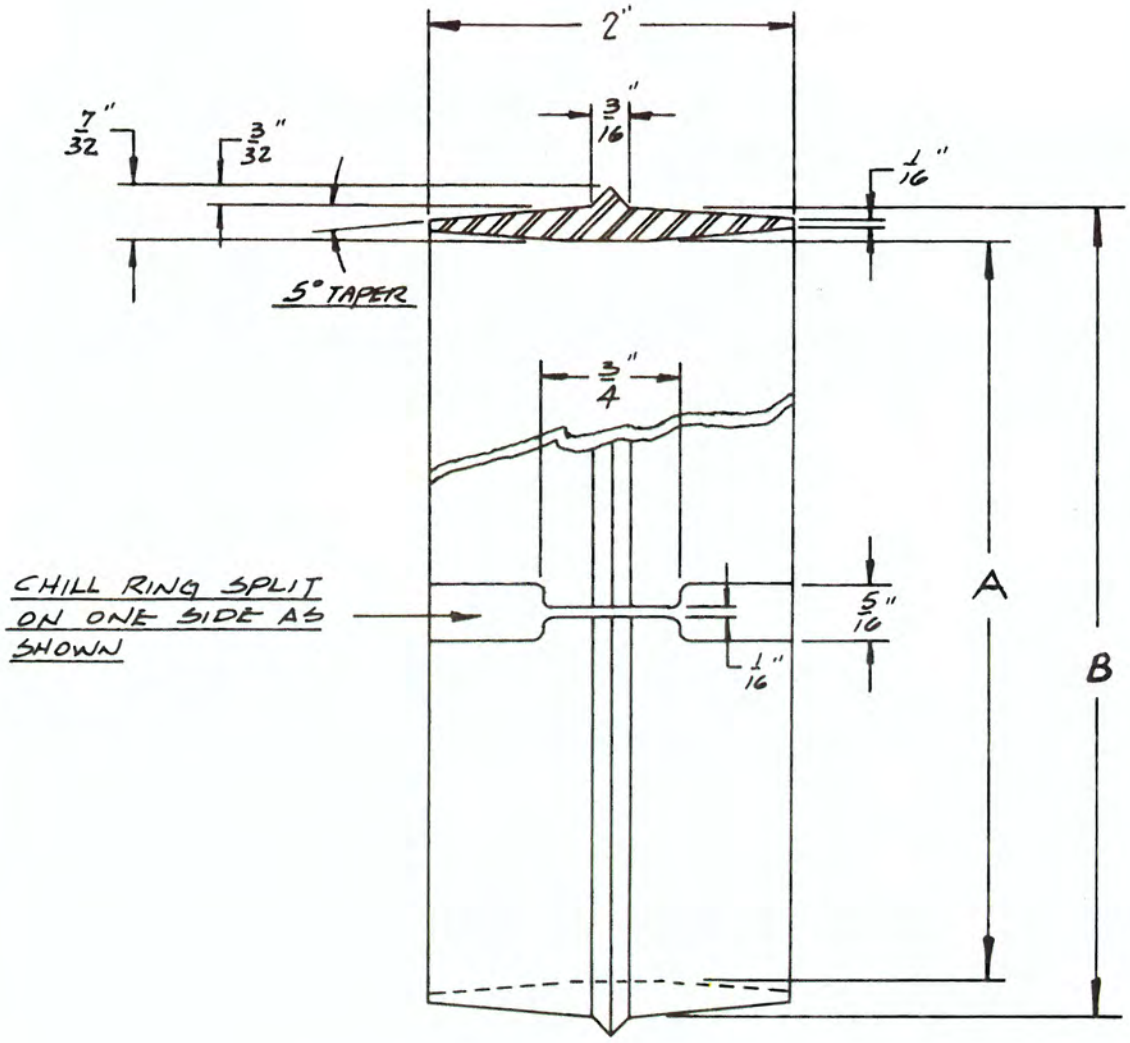

FIG. Nº	PIPE SIZE-O.D.	DIMENSIONS A	DIMENSIONS B
1	4 1/2"	4.250"	4.500"
2	5 9/16"	5.3125"	5.5625"
3	6"	5.750"	6.000"
4	6 5/8"	6.375"	6.625"
5	7"	6.750"	7.000"
6	8 5/8"	8.375"	8.625"
7	10 3/4"	10.500"	10.750"
8	12 3/4"	12.500"	12.750"

-DETAIL- CHILL RING

THE OKONITE COMPANY RAMSEY. N. J.. U. S. A.	DATE 10-31-63	SCALE ~	REVISIONS
	DR. HRH	TR. JFR.	DRAWING NO. 05-4339
	CH. HRH.	APP.	

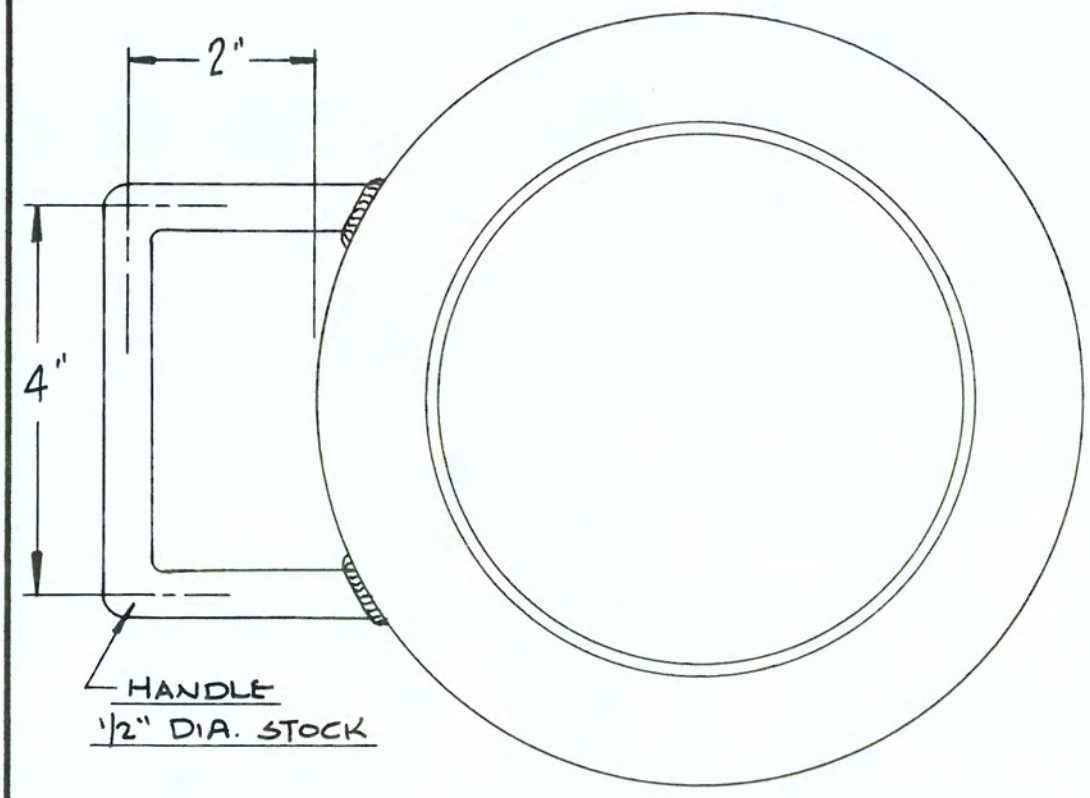

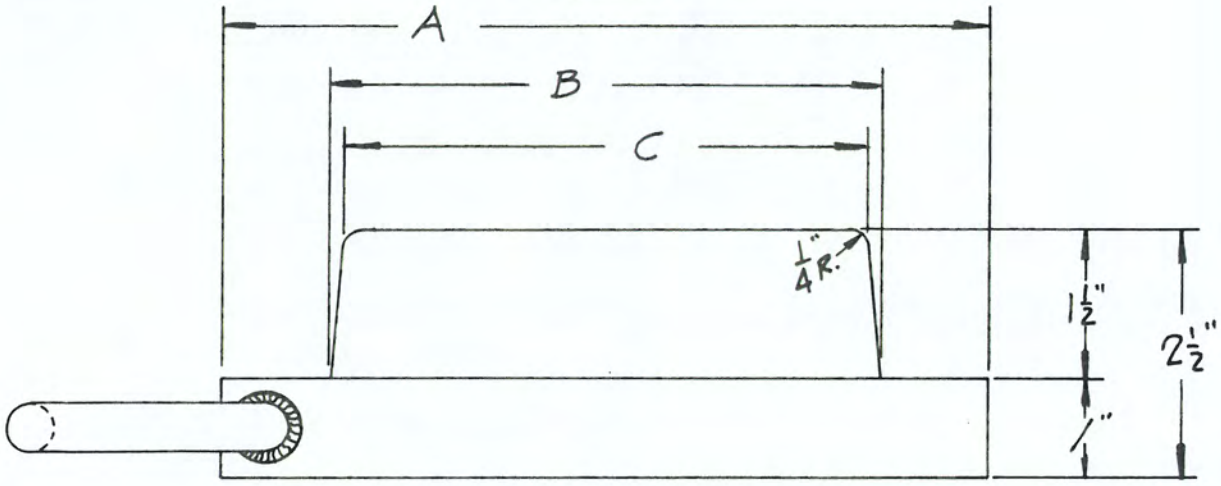

MATERIAL - STEEL

FIG. Nº	PIPE SIZE O.D.	DIMENSIONS A	B	C
1	4 1/2"	7"	4 5/8"	4 1/8"
2	5 9/16"	8"	5 5/8	5 5/16
3	6"	8"	6 1/32"	5 25/32"
4	6 5/8"	9"	6 3/4"	6 7/16"
5	7"	10"	7 1/8"	6 13/16"
6	8 5/8"	11"	8 3/4"	8 3/8"
7	10 3/4"	13"	10 7/8"	10 1/2"

DETAIL - FLARE OUT TOOL

THE OKONITE COMPANY
RAMSEY. N. J.. U. S. A.

DATE 10-30-63 | SCALE NTS | REVISIONS

DR. H.R.H. TR. J.R.P.

CH. APP.

DRAWING NO. OS-4435

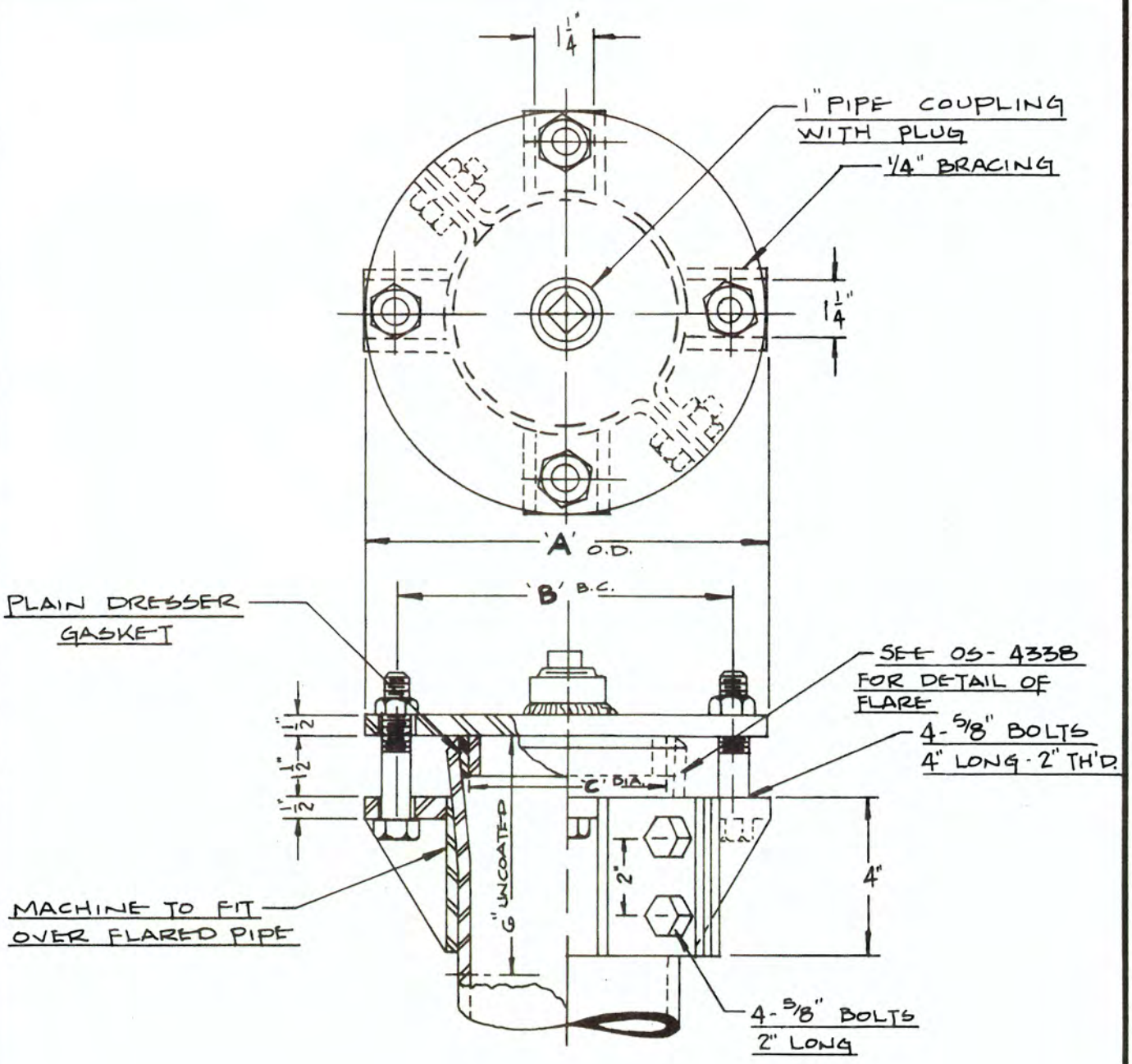

FIGURE No.	PIPE SIZE O.D.	DIMENSIONS IN INCHES			
		'A'	'B'	'C'	PLAIN DRESSER GASKET
1	4 1/2"	9	7 1/2	4	4" I.D. x 1" x 1/2" SECTION
2	4 3/4"	9	7 1/2	4	4" I.D. x 1" x 1/2" SECTION
3	5 9/16"	10	8 1/2	5	5" I.D. x 1" x 1/2" SECTION
4	6"	10	8 1/2	5 1/2	5 1/2" I.D. x 1" x 1/2" SECTION
5	6 5/8"	10 1/2	9	6	6" I.D. x 1" x 1/2" SECTION
6	7"	11	9 1/2	6 1/2	6 1/2" I.D. x 1" x 1/2" SECTION
7	8 5/8"	12 1/2	11	8	8" I.D. x 1" x 1/2" SECTION

"OILOSTATIC" DETAIL - TEST CAP

THE OKONITE COMPANY WIRE AND CABLE DIVISION RAMSEY, N.J.	DATE 1-23-64	SCALE	REVISIONS
	DR. RAH	TR. J.F.R.	DRAWING NO.
	CH. HRM	APP.	05-4436

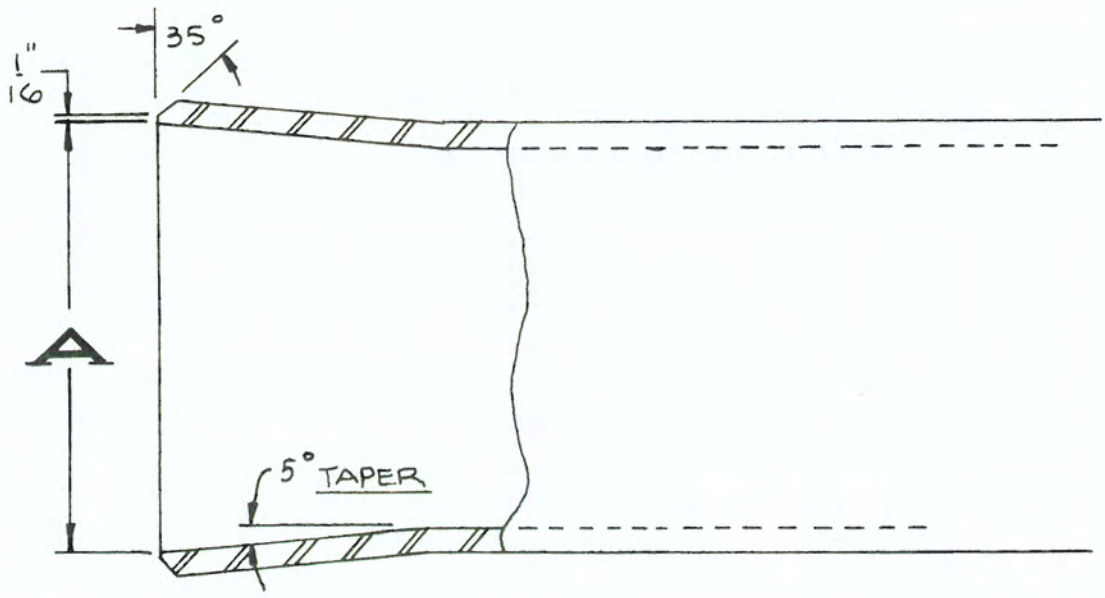

NOTE

DEPTH OF FLARE SHALL VARY WITH THICKNESS OF PIPE

FIG Nº	PIPE O.D.	DIM. A
1	4 1/2"	4.500"
2	5 9/16"	5.5625"
3	6"	6.000"
4	6 5/8"	6.625"
5	7"	7.000"
6	8 5/8"	8.625"
7	10 3/4"	10.750"

DETAIL - PIPE END FLARE

THE OKONITE COMPANY
RAMSEY. N. J.. U. S. A.

DATE 1-15-65 | SCALE N.T.S. | REVISIONS

DR. H.R.H. TR.

CH. APP.

DRAWING NO.
05-5722

SECTION 2

THE OKONITE COMPANY

INSTALLATION OF WELDED TYPE TERMINATION ASSEMBLY

1.0 SCOPE

The intent of this specification is to cover The Okonite Company's recommended practice for the installation of an all welded type stainless steel termination assembly.

2.0 DESCRIPTION

The termination assembly consists of a spreaderhead, riser pipes, and weld type couplings.

The spreaderhead is made of carbon steel except for the spreaderhead plate which is type 304 stainless steel. The riser pipes and weld type couplings are made of type 304 stainless steel.

The pothead base plates must be available for welding to the riser pipes. Pressure plates for the baseplates must also be available to permit pressure testing all welds after completion.

3.0 WELDING

The following welding rods are recommended for assembling the termination assembly:

Stainless steel to stainless steel: Use rod AWS and ASTM Class No. 308-16, Airco rod No. 19-9 (ac-dc) or equal

Stainless steel to carbon steel: Use rod AWS and ASTM Class No. 310-16, Airco rod No. 25-20 (ac-dc) or equal

Carbon steel to carbon steel: AWS Class E-6010, Fleetwood #5 or equal

4.0 ASSEMBLY

Refer to the various drawings showing details of the termination assembly and the component parts before starting assembly of any of these parts.

All component parts should be kept clean and free of contamination. Check all components for cleanliness and swab interiors if contamination exists.

Mount the spreaderhead with its temporary dresser coupling on the previously prepared pipe end and check to make sure it is level and plumb. Tack weld it to the pipe temporarily.

Install riser pipes using either of the two following applicable arrangements as shown on the drawings furnished for this installation:

A.) Where a coupling is used to join the riser pipe to the pothead stub, slide a coupling up over the pothead stub and secure it temporarily in this position. Cut the ends of the riser pipe as necessary so they will properly fit. Round off the inside edge of all cut ends and make sure interior of pipe is clean. Slide the bottom end into the spreaderhead and align the top end of the pipe with the baseplate stub. Lower the weld type coupling and temporarily secure in final position.

B.) Where no coupling is used at the pothead stub, cut the ends of the riser pipe as necessary so the top end of the riser pipe is below the surface of the baseplate. Round off the inner edge of the top end of the pipe to 1/8" radius to prevent damage to cable during pulling. Slightly round off the inner edge of the bottom end. Slide the top end up into the baseplate stub and then slide the bottom end into the spreaderhead.

Repeat this operation for the other two riser pipes.

After all three riser pipes have been properly fitted into place, the spreaderhead should be welded to the main line pipe. The individual riser pipes can then be welded into their final position. Use caution in welding the riser pipes to avoid overheating and warping the baseplate or spreaderhead plate.

Upon completion of all welding, check the inside of the riser pipes at all weld areas for burn-throughs and cleanliness. Swab if necessary.

Close the spreader opening with the dresser sleeve and test the welds for leaks using nitrogen pressure. The system should then be evacuated and pressurized with nitrogen until cable pulling operations are started.

5.0 FINAL OPERATIONS

After the cable pull has been completed, the dresser coupling end rings and gaskets should be cut away. The flared end portions of the dresser sleeve should also be cut off and removed. The sleeve

should then be welded into place over the openings in the spreader chamber. Stagger the welding of each pass to allow sufficient time for cooling between each pass. This will prevent undue heating of the cables.

6.0 FINAL CLEANING

After the cable has been installed and the terminal assembly completely welded, some localized rust spots may be noticed on the stainless steel riser pipes. This occurs where the stainless steel has come into contact with plain steel during processing or handling operations. Scrub these areas using a stainless steel brush and wash the stainless steel parts with a strong detergent and rinse.

7.0 PROCEDURE AND SEQUENCE OF OPERATIONS

The instructions given in this manual are intended to cover what might be considered a typical pipe type cable installation. They are not intended to cover every condition which might occur on every installation. It should be recognized that each installation has its own special characteristics and features. Thus, these instructions can be modified or interpreted to cover contingencies at the discretion of the Okonite Field Advisor and/or the owner's Engineering Department representative.

JTZ/row
6-72

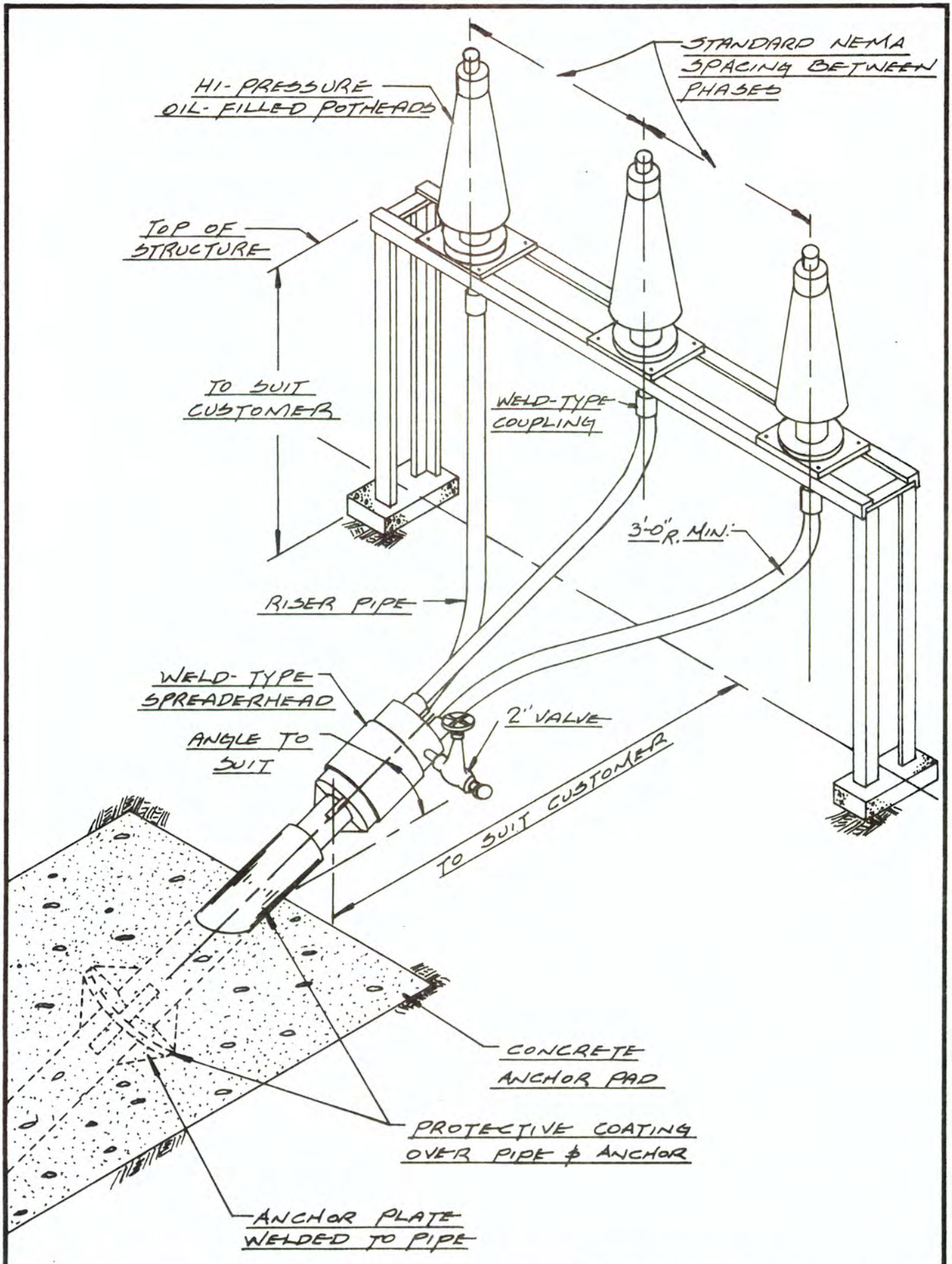

TYPICAL - TERMINATION ASSEMBLY - ANGLE TYPE

THE OKONITE COMPANY RAMSEY. N.J.. U.S.A.	DATE 1-9-64	SCALE N.T.S	REVISIONS
	DR. RAH	TR.	DRAWING NO.
	CH. WRW.	APP.	OS-5467

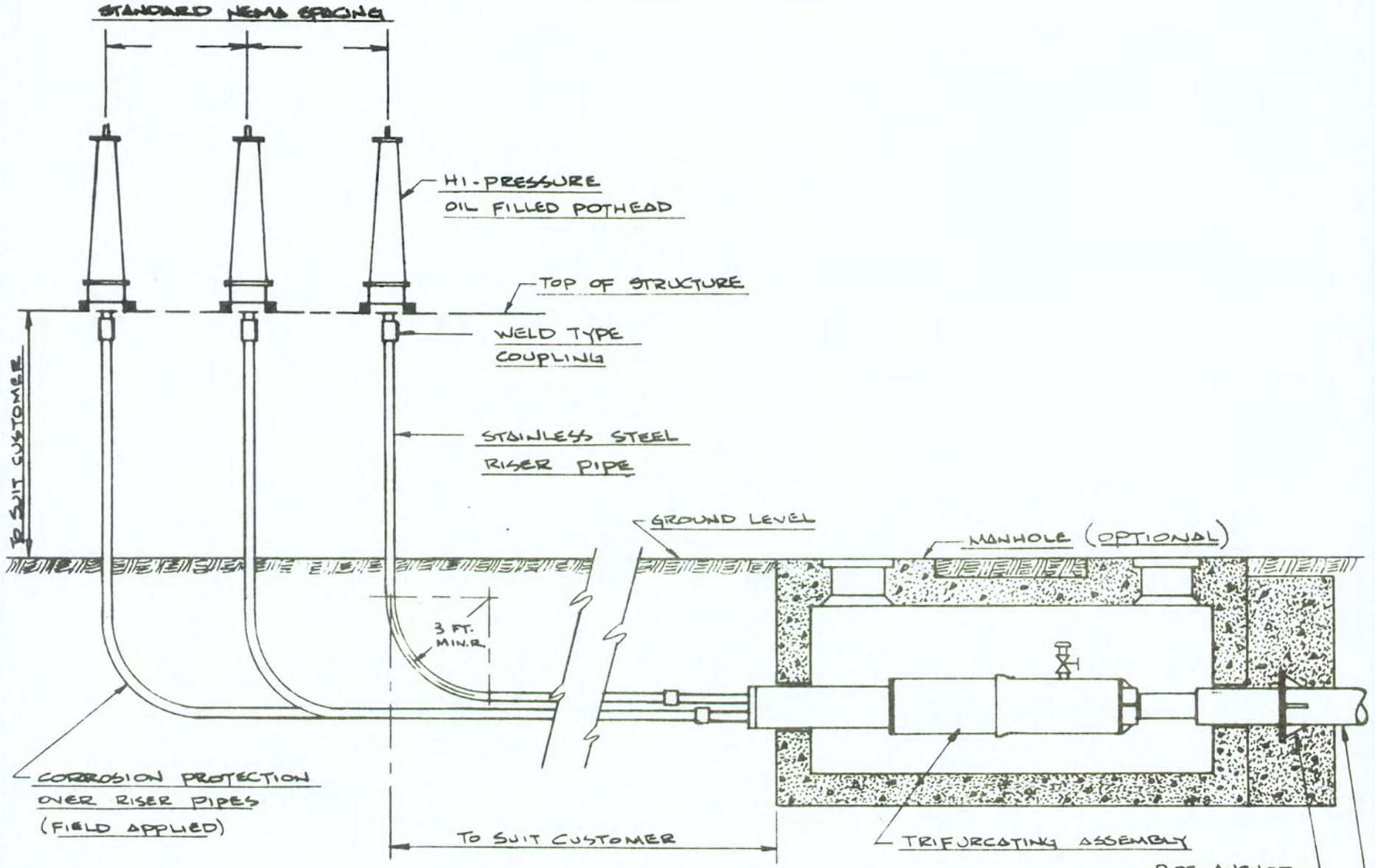

TYPICAL - BELOW GROUND TERMINATION

THE OKONITE COMPANY
RAMSEY, N.J., U.S.A.

DATE 5-9-73	SCALE	REVISIONS
DR. J.E.R. TR.		
CH.		
APP.		

DRAWING NO. 05-7010

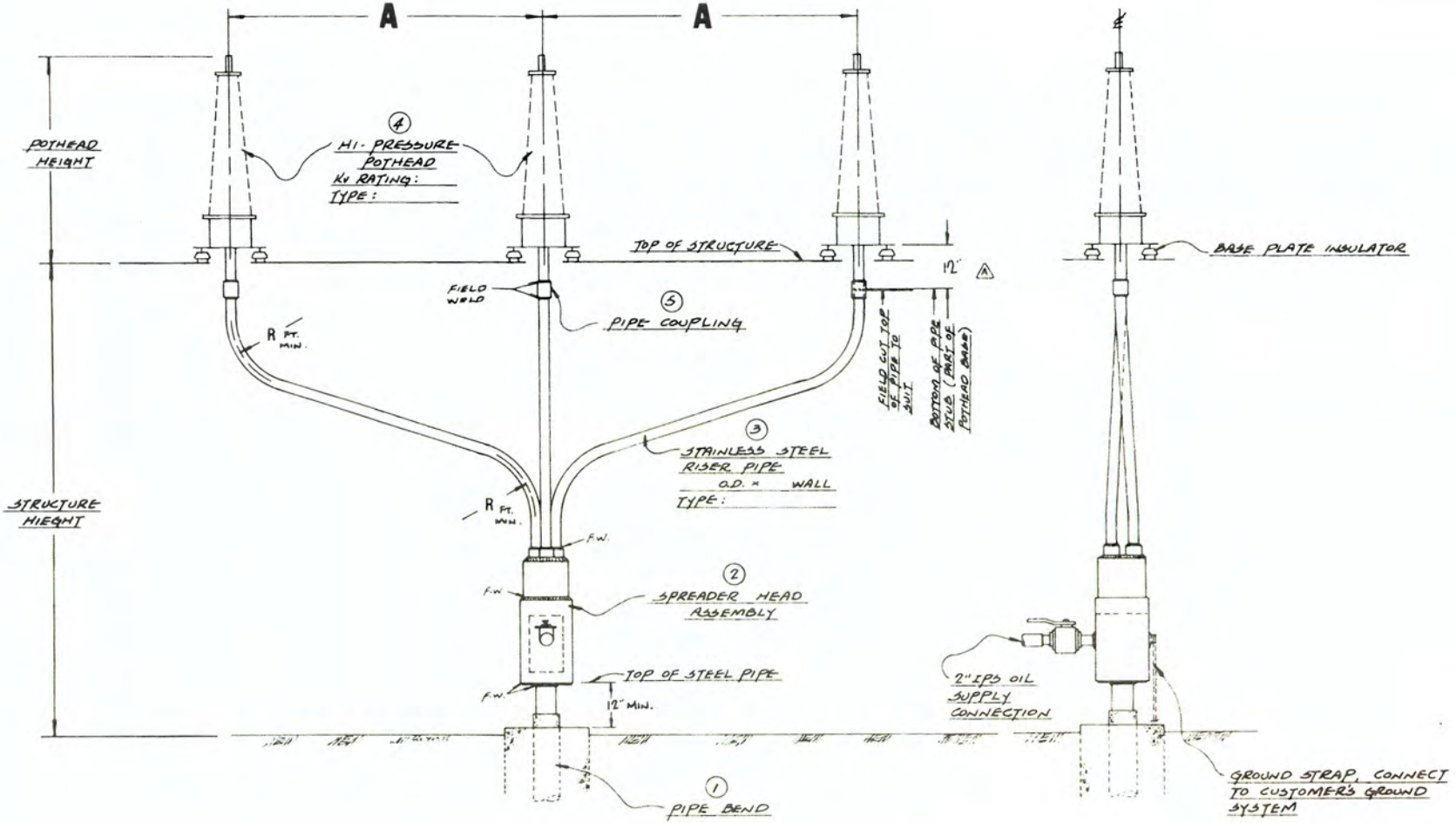

TYPICAL DIMENSIONS					
FIG. Nº	Kv	NEMA STD.	R	POTHEAD HEIGHT	STRUCTURE HEIGHT
1	69	4'-6"	3'	5'-0"	11'-0"
2	92	5'-0"	3'	5'-8"	11'-0"
3	115	6'-0"	3'	6'-2"	12'-6"
4	138	7'-0"	3'-6"	7'-1"	13'-6"
5	161	8'-0"	4'	7'-6"	15'-6"
6	230	11'-0"	4'	10'-0"	15'-6"
7	345	16'-0"	6"	12'-6"	21'-0"

NOTES

1. REFER TO LIST OF MATERIALS FOR PART NUMBERS
2. RADII & DIMENSIONS OF RISER PIPE ASSEMBLY ARE APPROXIMATE AND SHOULD BE VERIFIED TO SUIT FIELD CONDITIONS

REVISION	BY	DATE	DESCRIPTION
D			
C			
B			
A	[illegible]	5-20-71	CORRECTED BASE PLATE DIMENSION

MACHINING TOLERANCES UNLESS OTHERWISE SPECIFIED

DEC	FRACT	ANG
± .005	± 1/64	± 1/2

1/32 MAX TOOL RAD. | ✓ DENOTES RMS FINISH

THE OKONITE CO.
RAMSEY N.J.

PROPERTY OF THE OKONITE CO. TO BE RETURNED UPON REQUEST AND USED ONLY IN REFERENCE TO CONTRACTS OR PROPOSALS OF THIS CORPORATION. REPRODUCTION OF THIS PRINT OR UNAUTHORIZED USE OF PATENTED OR PATENTABLE FEATURES DISCLOSED HEREON IS PROHIBITED.

DATE 5-11-73
SCALE NTS
DRAWN [illegible]
CHECKED
APPROVAL [illegible]
DRAWING NO OS-7011
SHEET OF

TITLE
'TYPICAL'
ABOVE GROUND TYPE
TERMINATION ASSEMBLY

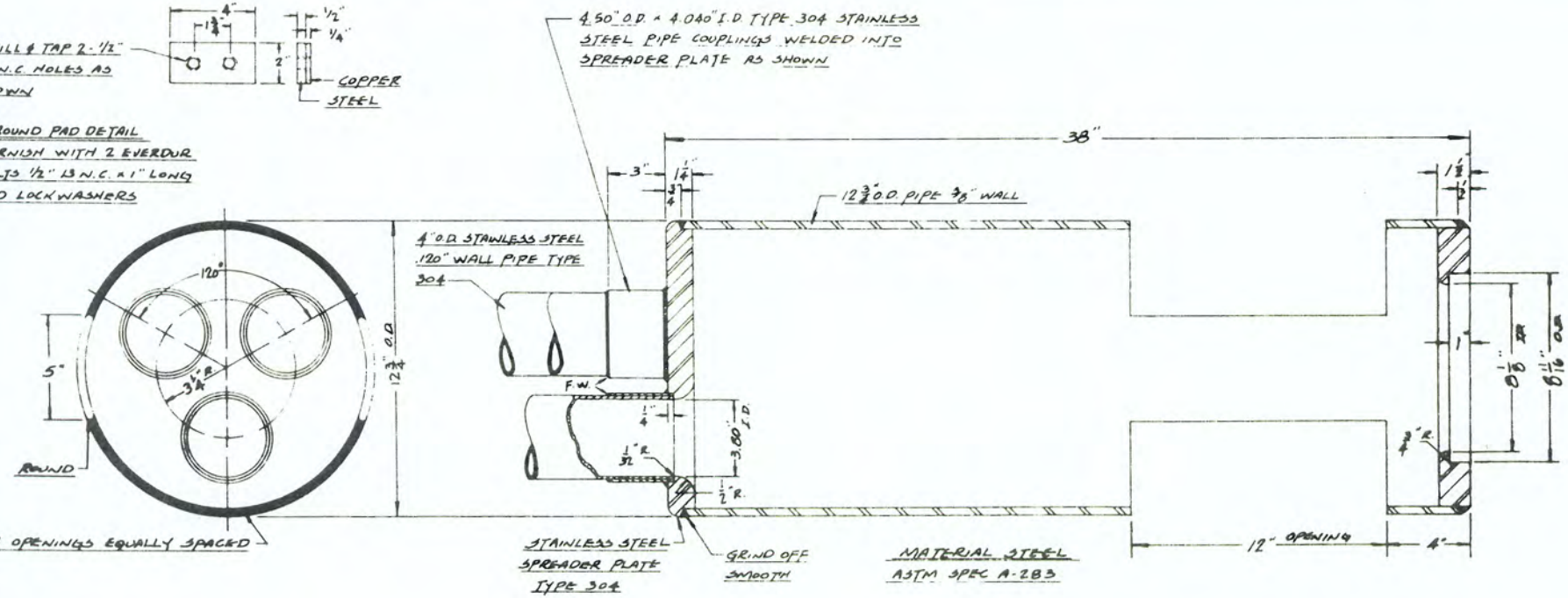

INSTRUCTIONS

AFTER FABRICATION, TEST AT 100# GAS PRESSURE SUBMERGED IN WATER BATH FOR POROSITY AND AGAIN AT 400# GAS PRESSURE

FINISH

INTERIOR: 1ST WIRE BRUSH & WIPE CLEAN
2ND APPLY ONE COAT OF SOLVENT CLEANER
3RD APPLY ONE COAT OF ENDCOR "745

EXTERIOR: 1ST SANDBLAST TO BRIGHT METAL
2ND APPLY ONE COAT OF YELLOW ZINC CHROMATE

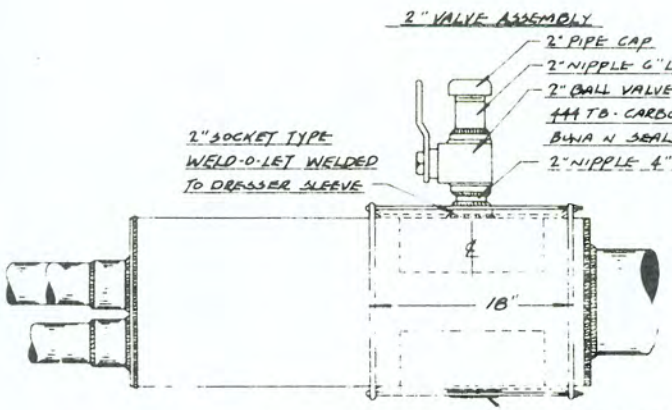

DRESSER STYLE 40 LONG SLEEVE COUPLING FOR 12 3/4" O.D. STEEL PIPE WITH 5/8" x 1 3/16" ARMORED GASKETS FOR TEMPORARY CLOSURE OF OPENINGS FOR FINAL CLOSURE, FLARE AT EACH END OF COUPLING IS TO BE REMOVED AND SLEEVE WELDED CIRCUMFERENTIALLY IN PLACE

REVISION	BY	DATE	DESCRIPTION
D			
C			
B			
A	JZ	1-11-78	GENERAL REVISION

THE OKONITE CO.
RAMSEY, N.J.

DATE 7-27-77
SCALE NTS
DRAWN CMR
CHECKED
APPROVAL
DRAWING NO. OS-7265
SHEET OF

TITLE

ASSEMBLY
WELD TYPE SPREADER HEAD

SECTION 3

OILOSTATIC CABLE INSTALLATION

1.0 SCOPE

The intent of this specification is to cover The Okonite Company's recommended practice for the field handling, installation and testing of the "Oilostatic" cable used in the "Oilostatic" cable transmission system.

2.0 CABLE DESCRIPTION

The cable furnished shall be in accordance with the latest requirements of the AEIC "Specifications for Impregnated Paper Insulated Cables, High Pressure Pipe Type", 3rd edition, October 1973, for oil pressure type cables.

3.0 CABLE HANDLING

The cable will be shipped via railroad (or truck as specified) on Okonite sealed reels, as required by the schedule, and shall be routed as directly as possible to the job location with a minimum of rehandling and storage from the time of manufacture until installation is complete.

Reels containing cable shall under no circumstances be dropped or allowed to roll uncontrolled down skids or runways in the process of loading or unloading. Reels shall not be rolled over obstructions that may break the lagging or injure the cable. Reels should be unloaded using lifting beam with flange hooks, or using a steel bar through arbor hole with spreader bar.

Upon arrival of each shipment from the manufacturer and before unloading and taking delivery, a thorough visual inspection should be made on each reel to determine whether any damage may have occurred during transit. Any damage detected shall be immediately reported to the delivering carrier (and noted on all copies of the delivery receipt if truck shipment). The Okonite Company area representative should also be immediately notified.

The cable is shipped on sealed reels with a metallized "blanket" covering designed to keep the cables in an atmosphere of dry nitrogen.

4.0 CABLE STORAGE

Precautions shall be taken during storage and installation to protect the cable from moisture, dirt, grit, and physical damage.

The cables should be stored above flood level in a dry building or under temporary cover which will keep rain, snow, sunlight off the reels. If temperatures below 14 F are expected during storage, the cables should be stored in a heated building.

Space should be allowed between each reel for checking of dew points and purging with dry nitrogen while in storage.

The dew point of each reel should be checked after unloading and transportation to the storage area. If the dew point is higher than 40 F below the average daily ambient temperature, the reel should be purged with dry nitrogen gas to attain this dew point. A specification for the dry nitrogen gas recommended for this purging operation is attached. Dew points should be checked at two week intervals while the cable is in storage.

The metallized "blanket" covering is not designed to maintain or withstand pressure and in no case should any pressure be applied to the covering during the purging operation.

5.0 CABLE PULLING EQUIPMENT

3 - Steel bars or heavy pipe and collars of sufficient strength for the weight of the cable to go through the center of the cable reel and rest on the jacks or other supports.

6 - Jacks, reel stands, or other means of support for cable reels during pulling.

Crane and suitable slings for unloading the cables from the railroad cars or trucks to the supports for the cables at the pipe location.

V-guide reel, 6 ft. minimum diameter with a V-groove not less than 5 ft. diameter to align the cables in triangular formation before they enter the feed-in tube. For manhole to manhole pulls.

Feed-in tube of steel pipe or flexible tubing to be connected to the steel pipe in the manhole and extend above the ground at the manhole. For manhole to manhole pulls.

"A" frame with a bar and roller for support of the three cables. This is to be placed between the sheave and first cable reel.

3 - Arced feed-in tubes or 3 V-guide reels same size as above. For terminal to manhole pulls.

Pulling yoke suitable for pipe and cable size involved.

Pulling winch (gasoline motor driven type) with sufficient length of 1" minimum size steel pulling cable, geared to permit pulling the cable at different speeds, mounted on a trailer. The steel cable should have a steel center not hemp core center.

Dynamometer, indicating tension up to 40,000 lbs.

Footage indicator

Tarpaulins to cover the three cables up to and including the feed-in tube.

Frame for support of tarpaulins.

V-roller for guiding the steel pulling cable at reducer.

Deflection shoe for guiding the Oilostatic cables clear of the pipe end in the pull-out manhole.

Telephone or radio service for communicating between the feeding and pulling ends of the section.

Flexible roller chain of sufficient length to fit in 90° termination bends. To prevent 1/4" steel cable from cutting into bends.

Sufficient amount of suitable Sun #6, Sun #4 or polybutene oil for lubricating the cable. (Approximately 15 gallons for each manhole section.)

Projectile bullet to blow a 1/4" steel cable through the pipe line section. The 1/4" steel cable is to be used for pulling the steel winch cable into the pipe.

End cap with nipple for nitrogen gas connection and a gland for 1/4" steel cable.

Sufficient number of lengths of 1/4" steel cable.

Pulling shackle assembly with slings and swing links for use on end of cable.

Dry nitrogen gas per attached specification.

Low pressure nitrogen regulators 60 psi, and 1/4" hose.

Water pumps and blowers for drying and ventilation of manholes.

Miner's safety lamp for monitoring oxygen supply.

CAUTION: Adequate ventilation must be provided at manholes into which nitrogen enters in the operations described below and at pull out end. Severe injury or death can result if proper safety procedures are not followed in entering or working in such manholes.

Vacuum pump of approximately 100 cubic feet per minute capacity and capable of attaining a vacuum of 50 microns when blanked off.

Vacuum trap tank and vacuum hoses.

Vacuum gage with Tygon or rubber hoses.

Sufficient number of night caps, gaskets, and bolts to enclose the cable ends in the manholes after the cables have been pulled in. These night caps each must have fittings for connecting to 2" vacuum hose and admitting and releasing nitrogen gas.

Sufficient number of night caps, gaskets and bolts to enclose cables at terminals.

White cotton gloves and lint-free rags.

Standard welding equipment.

6.0 PREPARATIONS BEFORE CABLE PULLING

It is recommended that the manhole be thoroughly cleaned, dried, and the manhole blower started prior to cable installation.

It is assumed that there is a gas pressure of approximately 5 psi in the pipe line. The gas is to be released only in the one pipe section into which the 1/4" steel cable is to be blown by means of a bullet. After the end seals have been removed from the pipe section, the bullet is inserted into one end. The 1/4" cable is threaded through the gland in the end cap and attached to the bullet. This steel cap is then fastened to the pipe line with a clamp. The gas needed for this operation may be obtained from gas stored at a high pressure in the adjacent pipe section or from nitrogen cylinders. The pipe section should be prelubricated prior to cable pulling by inserting 10 gallons of Sun 6 oil in front of the pneumatic bullet if the pull is long or high tensions are expected.

IMPERATIVE: No one shall be permitted in the manhole at the remote end of the pipe section during the blowing of the bullet through the pipe. After the bullet has been blown through, ventilate thoroughly, and before entering manhole use the miner's safety lamp to check for lack of oxygen.

The 1/4" cable will be used later for drawing the pulling cable through the pipe before the Oilostatic cable is to be installed.

After the 1/4" cable is pulled in, the ends of the pipe shall be temporarily sealed while preparations are being made to pull in the steel pulling winch cable.

Attach the V-roller to the face of the reducer in the manhole.

As a final check on the suitability of the pipe for cable installation, cloth swabs and a steel mandrel should be drawn through the pipe between the lead line and the steel pulling cable. The mandrel shall have a diameter 3/8" smaller than the pipe I. D., and 8" minimum length with a 1" minimum radius on each end.

Clean and lubricate the steel pulling winch cable as it is being pulled into the pipe. When it reaches the far end, remove the swabs and mandrel. Carefully examine the swabs for any water, tears, or foreign matter which might indicate a hazard to cable installation.

Set the cable reels into position so that the "Pull This Direction" arrows are toward the manhole. The "dogholes" on the reels should be on the left side when you are standing at the manhole and looking at the reels. Both these checks must be made when setting the reels into position.

Cable reels shall be set-up to conform to the pulling directions as specified by the Project Engineer. During pulling, all exposed cable shall be sheltered in a suitable reel house of such design that can quickly and easily be made rain-tight, if necessary. The pulling line and reel on the pulling rig shall also be suitably shielded at all times against rain. Before protective lagging and blankets are removed from the cable reels, dew points should be taken on each reel.

Cable pulling shall not start if there is any indication that there may be precipitation before the cable can be completely installed and the pipe section in which it is installed can be sealed. From the time a section of pipeline is opened for cable installation until the pipeline is sealed after cable installation, a continuous flow of dry nitrogen shall be maintained at a rate and in a manner that will prevent entrance of air into the pipeline.

The installation of cable in any section of pipe when once started shall proceed without interruption until the installation is complete and the section of pipe in which the cable is installed is sealed, evacuated, and filled with dry nitrogen at a pressure of 5 lbs. gage or 1/2 psi per foot of maximum depth of burial (whichever is higher). In some instances, depending on specific installation and weather conditions, the pipe section can be purged with dry nitrogen for 10 minutes after cable pulling, then temporarily packed with dry nitrogen, and evacuation performed within three days. This procedure should only be followed when cleared with the Okonite Field Advisor.

The three cable reels shall be set-up and the three single conductor cables fed into the pipe simultaneously, supported on suitable sheaves, in such a manner as to provide a minimum of cable bending. The type of rigging at the pulling end is optional; but in any case, it must be secure and so set-up that the pull is as straight out from the pipe as possible. It shall be installed in such a manner that the necessary cable slack for splicing will be provided without additional hitches and without subjecting the cable to excessive bearing pressures.

Lags shall be removed from the cable reels only after the reels are in pulling position and in such fashion as to create no damage to the cable. One recommended method of doing so is by (1) stapling the banding straps to the two lags in the plane of the hub, (2) fastening the stapled lags to the reel flanges with 4 C clamps, (3) cutting the banding straps just below the stapling points to free the lags on the lower half of the reel then clearing the lags away and (4) turning the reel one-half turn and removing the C clamps to drop the remaining lags. Another method is to secure the lagging on the reel with a rope then cut the banding straps and remove the lagging one at a time from the bottom.

After the lagging is removed from the cable reels, the inner seal on the Oilostatic cable should be left sealed until after the steel pulling winch cable is pulled through the pipe and ready for attaching to the pulling yoke.

Each length of cable will be furnished with a pulling bolt or eye attached to the leading end and a tie eye fastened to the trailing (inside) end. This tie eye is fastened to a 1/8" steel wire rope which is wrapped around the drum and fastened to the reel.

Assemble the pulling bolts or eyes of the three cables to the pulling yoke secured to the steel pulling winch cable.

A thorough visual inspection for flaws, breaks or abrasions of the exterior of the cable shall be made as it leaves the reel and the pulling speed shall be low enough to allow for that inspection.

The pulling speed should not exceed 35 ft. per minute and pulling tension should not exceed the specified limits. The pulling equipment should permit a smooth change of speed down to almost a standstill. If pulling is interrupted, the start should be made at low acceleration, to avoid high pulling tension.

During installation of the first 500 ft. of cable in each section, the cable should be lubricated with 5 gallons of Sun #6 oil if the pipe was not lubricated previously, or if the pull is long and high tensions are expected.

Extreme care shall be taken at all times to prevent sharp bends in the cable. After removal from the reel, the cable shall not be bent to a radius of less than 12 times its diameter under any conditions. A reliable, accurately calibrated direct reading dynamometer shall be used in the pulling mechanism to indicate the pulling tension of all pulls. A measuring device that will continuously indicate the length of the cable pulled into the pipe shall also be used during pulling.

A reliable telephone or radio telephone communication, between the two ends of the section of pipe in which the cable is to be installed, must be established and maintained during all cable pulling operations.

7.0 CABLE PULLING -- GENERAL

The dynamometer readings should be recorded every 100 feet during the cable pull.

Before the cable pull is started, a brakeman must be stationed at each cable reel for the purpose of controlling the cable slack during the pulling operation.

During pulling, the cable shall not be permitted to touch the ground nor to form loops having a radius of less than four feet which might cause kinking or damage to the paper tapes of the cables.

Assuming all of the foregoing is in order, the actual cable pull is ready to commence. Once the cable pull is started, it is recommended it be continued without interruption.

After all cables are pulled, and splicing and terminating operations are underway, the phasing must be checked in the last manhole prior to making up the last splice. The owner should advise the Project Superintendent the phasing arrangement at each terminal end, in order that cables are properly phased out to match in the last manhole.

7.1 CABLE PULLING -- MANHOLE PULLS

Pull the Oilostatic cable through the pipe to a point where the pulling yoke is at the reducer in the manhole. Stop the cable pull and remove the V-roller from the face of the reducer. Install the deflection guide shoe on the face of the reducer and continue with the cable pull until at least 12" of usable cable has been pulled beyond the center line of the joint.

When the required amount of cable is pulled through the reducer, stop the cable pull. Support the cable extending out of the reducer and secure D wires on all 3 cables where they are to be cut. Cut the 3 cables so a minimum of 12 inches of usable cable extends past the center line of the joint. Seal the cut ends with oiled paper cups, plastic, or metallized blanket material and tape each end. Remove the deflection guide shoe from the face of the reducer. Install the night cap with gasket over the cable ends, in such a position that it will not interfere with the adjacent pull in the same manhole, and secure with bolts to the reducer.

7.2 CABLE PULLING -- TERMINAL PULLS

The bolts should be removed from the dresser assembly at the spreaderhead and the sleeve lowered or elevated to expose the windows in the spreaderhead. The pneumatic bullet will be blown from the spreaderhead to the manhole. The 1/4" wire rope will be connected to the steel pulling cable at the manhole and pulled back to the opening in the spreaderhead.

A roller chain must be used in the 90° termination bend to prevent the 1/4" wire rope from cutting into the wall of the pipe bend during the pulling of the steel pulling cable back to the spreaderhead opening.

It is good practice to paint the 1/4" wire rope 50 ft. from the lead end. When this marker appears in the opening of the spreaderhead, the pulling operation is topped, the roller chain is removed from the pipe bend, and the remaining 50 ft. is pulled.

Feed-in tubes or V-guide reels are used for feeding the cables into the riser pipes. Necessary sheaves or rollers to support and guide the cables should be placed between the cable reels and the feed-in tubes or V-guide reels.

Each cable is pulled into the feed-in tube, or over the V-guide reel, and attached to the yoke at the opening in the spreaderhead.

Lubricate each cable with suitable Sun #6, Sun #4, or polybutene oil as it enters the riser pipe.

A polypropylene rope or steel wire rope (1/4" to 3/8" diameter) should be used to pull the cable into each riser pipe down to the spreaderhead window.

When V-guide reels are used, they must be positioned and secured on the steel structure in a manner that will prevent their movement during the cable pull.

It is imperative that each cable have sufficient clearance at entry into the baseplate opening to prevent damage to the cables at this entry point.

Upon completion of the termination cable pull, the cables should be cut and sealed, and the night caps installed in the manhole and at the termination.

The cuts should be made so a minimum of 1 foot of extra cable extends above the top of the pothead.

After the cable pull has been completed, the dresser coupling end rings and gaskets should be cut away. The flared end portions of the dresser sleeve should also be cut off and removed. The sleeve should then be welded into place over the openings in the spreaderhead. Stagger the welding of each pass to allow sufficient time for cooling between each pass. This will prevent undue heating of the cable. A nitrogen purge should be applied to the section during the welding.

8.0 EVACUATION PROCEDURE - AFTER PULLING CABLE & PRIOR TO SPLICING AND TERMINATING

After the cable is completely installed in each section, the ends of the pipe shall be sealed with air-tight protective caps and the pipe shall be evacuated to a value of 500 microns of mercury. After reaching 500 microns, the evacuation shall be continued for a minimum of four hours. Vacuum readings shall be taken at the end opposite from the vacuum pump if a single vacuum pump is used. At the end of the 4-hour pumping period, the vacuum pump shall be stopped and isolated from the lines. A vacuum drop test run shall be run. If the rise in pressure in one hour after disconnecting the vacuum pump exceeds 500 microns of mercury the entire vacuum treatment shall be repeated. When the vacuum test is acceptable, the vacuum shall be broken by admitting

dry nitrogen to approximately 5 psi and maintained at this pressure until splicing or terminating operations are begun. If the pressure in any section is reduced to 0 psi, the entire evacuation procedure shall be repeated before the section is re-pressurized.

9.0 EVACUATION PROCEDURE - AFTER COMPLETION OF ALL SPLICING AND TERMINATING AND PRIOR TO OIL FILLING

When the pipe system is complete, including the installation of cable, splices, terminals, and pumping plants, the complete pipe length and terminals shall be evacuated to an absolute pressure of 250 microns or less. After reaching 250 microns, the vacuum pump shall be kept running for a minimum of 8 additional hours. Vacuum readings shall be taken at the end remote from the end where the vacuum pump is located. At the end of the 8-hour pumping period, the vacuum pumps shall be isolated from the system and a one hour vacuum drop test run. If the rise in pressure exceeds 250 microns for the one-hour period, the entire vacuum treatment and drop test shall be repeated. If the drop test is acceptable, the system is then ready to fill with oil.

10.0 PROCEDURE AND SEQUENCE OF OPERATIONS

The instructions given in this manual are intended to cover what might be considered a typical pipe type cable installation. They are not intended to cover every condition which might occur on every installation. It should be recognized that each installation has its own special characteristics and features. Thus, these instructions can be modified or interpreted to cover contingencies at the discretion of the Okonite Field Advisor and/or the owner's Engineering Department representative.

THE OKONITE COMPANY

NITROGEN GAS SPECIFICATION

PURPOSE

1. To specify the various requirements for the nitrogen gas used during the installation of an Oilostatic pipe cable.

REQUIREMENTS

2. The nitrogen gas shall be Type III, produced from air by the liquefaction process and shall meet ASTM Tentative Specification for Nitrogen Gas as on Electrical Insulating Material D-1933-62 T and as listed in Table I.

TABLE I

Nitrogen, % by volume, min.	99.993
Hydrogen, % by volume, max.	0.005
Oxygen, % by volume, max.	0.002
Dew Point, °F max.	-75

3. Cylinders shall be charged with a pressure of 2200 psi at 70°F. Under these conditions the cylinders shall contain 224 cubic feet of free nitrogen at atmospheric pressure. In case the cylinders are delivered at a temperature above or below 70°F the gage pressures shall be in accordance with Table II.

TABLE II

Temperature, °F	Gauge Pressure, psi
0	1910
10	1950
20	1990
30	2035
40	2080
50	2120
60	2160
70	2200
80	2240
90	2280
100	2320

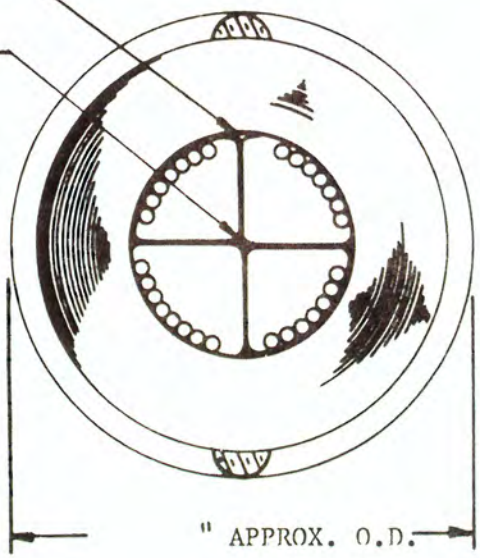

KV RATING - 100% INS. LEVEL
PER: AEIC PIPE TYPE CABLE SPEC.
THIRD EDITION

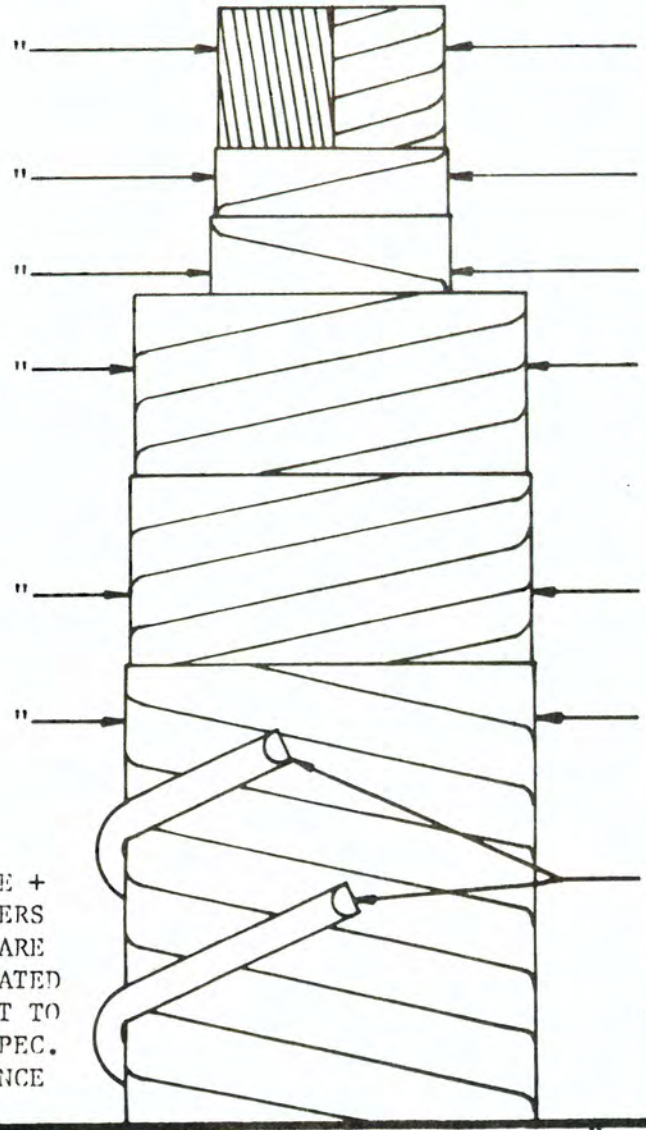

" KCMIL COMP. SEGMENTAL COND.
2 PAPER TAPES ON OPPOSITE SEGMENTS

" .005" ZINC ALLOY TAPE INTERCALATED WITH A PAPER TAPE

" 2 - .003" METALLIZED PAPER TAPES

" " WALL IMPREGNATED PAPER INSULATION INCLUDING SCREENING TAPES (OUTER INSULATING TAPES RIGHT HAND LAY)

" .005" METALLIZED PAPER TAPE INTERCALATED WITH A PAPER TAPE

" .005" ZINC ALLOY TAPE INTERCALATED WITH A .002" METALLIZED POLYESTER TAPE

2 - "D" SHAPED ZINC ALLOY ARMOR WIRES (.063" X .188") SPIRALLED OVER ALL (1-1/2" SPACING BETWEEN ADJACENT TURNS)

+ NOTE + DIAMETERS SHOWN ARE CALCULATED SUBJECT TO AEIC SPEC. TOLERANCE

APPROX. WT. LBS/FT

KCMIL COMP. SEGMENTAL COND. " WALL PAPER INSULATED PIPE TYPE CABLE

THE OKONITE COMPANY RAMSEY. N.J.. U.S.A.	DATE SCALE NTS DR. J.E.R. TR. CH. APP.	REVISIONS DRAWING NO. OCS -

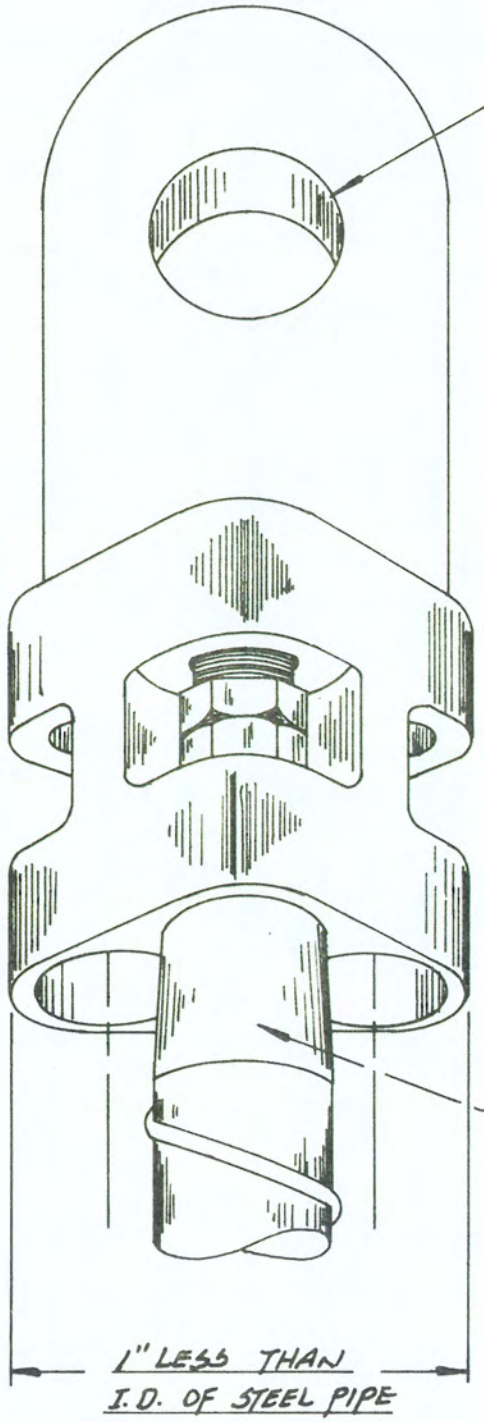

PULLING YOKE - TYPICAL

THE OKONITE COMPANY RAMSEY. N.J.. U.S.A.	DATE 4-1-63	SCALE N	REVISIONS
	DR. RAH TR. CH. APP.		DRAWING NO. OS-5470

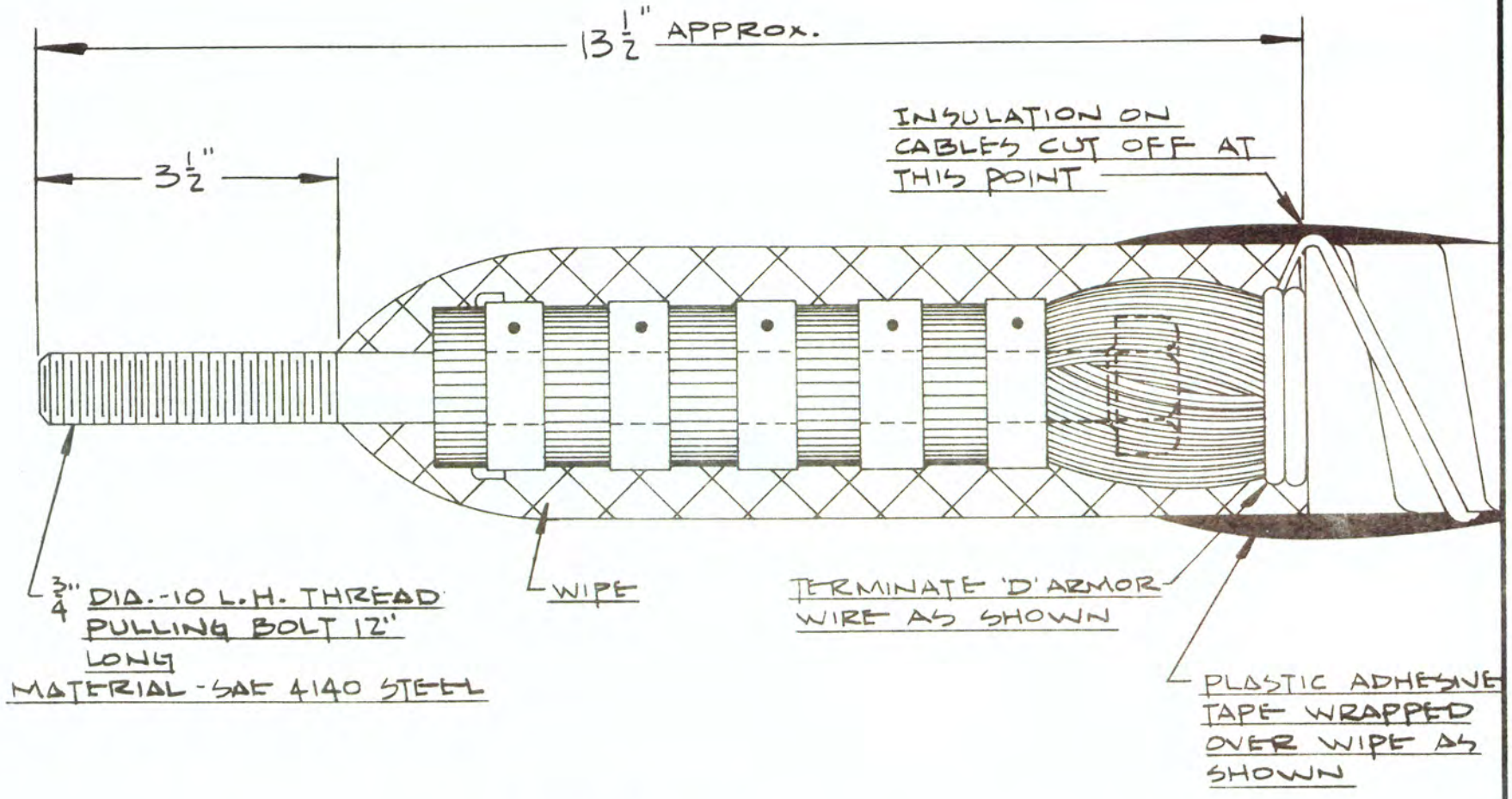

← NOTE →

1.- MAXIMUM O.D. OF LEAD WIPE SHALL NOT EXCEED O.D. OF CABLE OVER 'D' ARMOR WIRE
2.- FOR CONDUCTOR SIZES OF 2000 KCM TO 4000 KCM
3.- MAXIMUM ALLOWABLE TENSION IS LIMITED BY CONDUCTOR SIZE. ASSEMBLY AS SHOWN WILL STAND TENSIONS UP TO 20,000 LBS.
4.- FURNISH WITH TWO NUTS

PIPE TYPE CABLE 3/4" DIA. PULLING BOLT ASSEMBLY

THE OKONITE COMPANY
RAMSEY, N.J., U.S.A.

DATE 12-15-71 | SCALE ~
DR. CKG. TR.
CH. APP.

REVISIONS

DRAWING NO. 05-6626

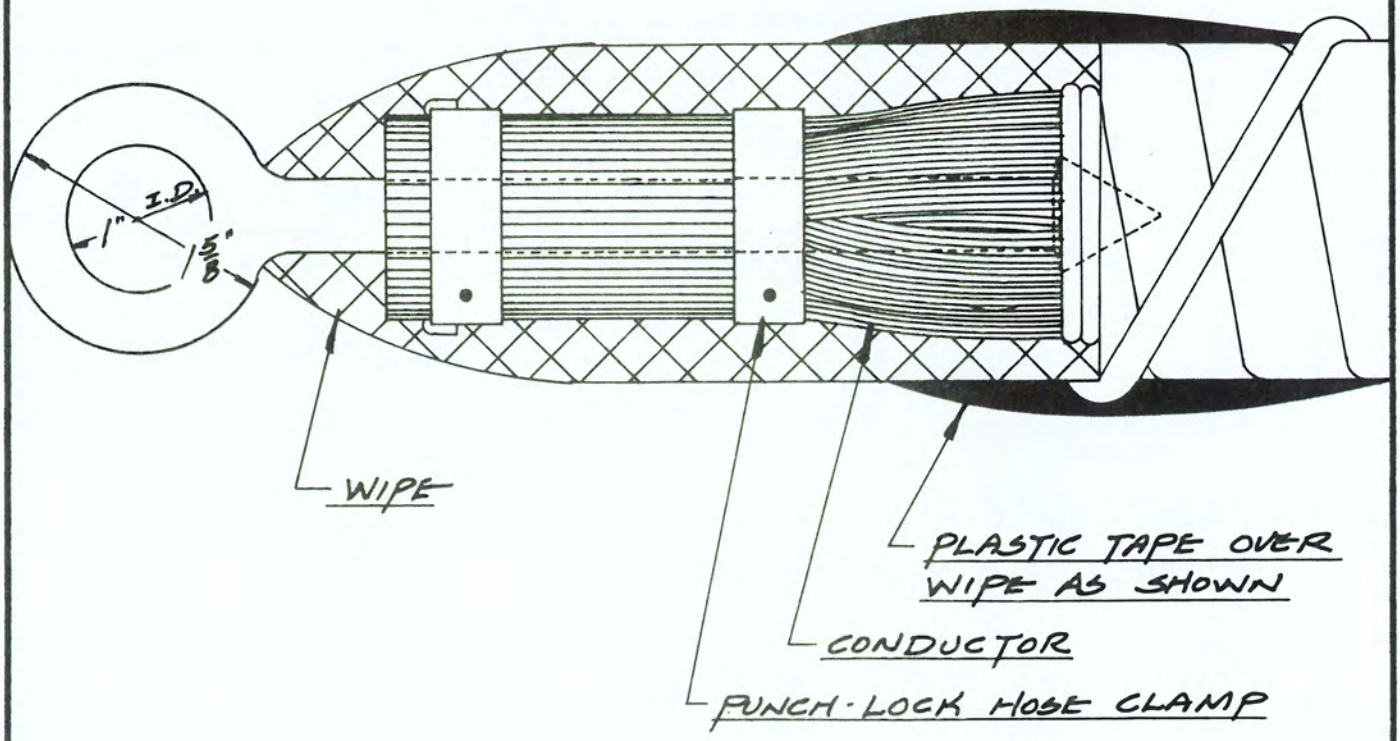

← NOTE →

MAXIMUM ALLOWABLE PULLING TENSION IS LIMITED BY CONDUCTOR SIZE. ASSEMBLY AS SHOWN WILL STAND TENSIONS UP TO 5,000 LBS.

OILOSTATIC TRAILING END EYE ASSEMBLY

THE OKONITE COMPANY RAMSEY. N.J.. U.S.A.	DATE 10-7-70	SCALE N	REVISIONS
	DR. TRR. CH.	TR. APP.	DRAWING NO. 05-6354

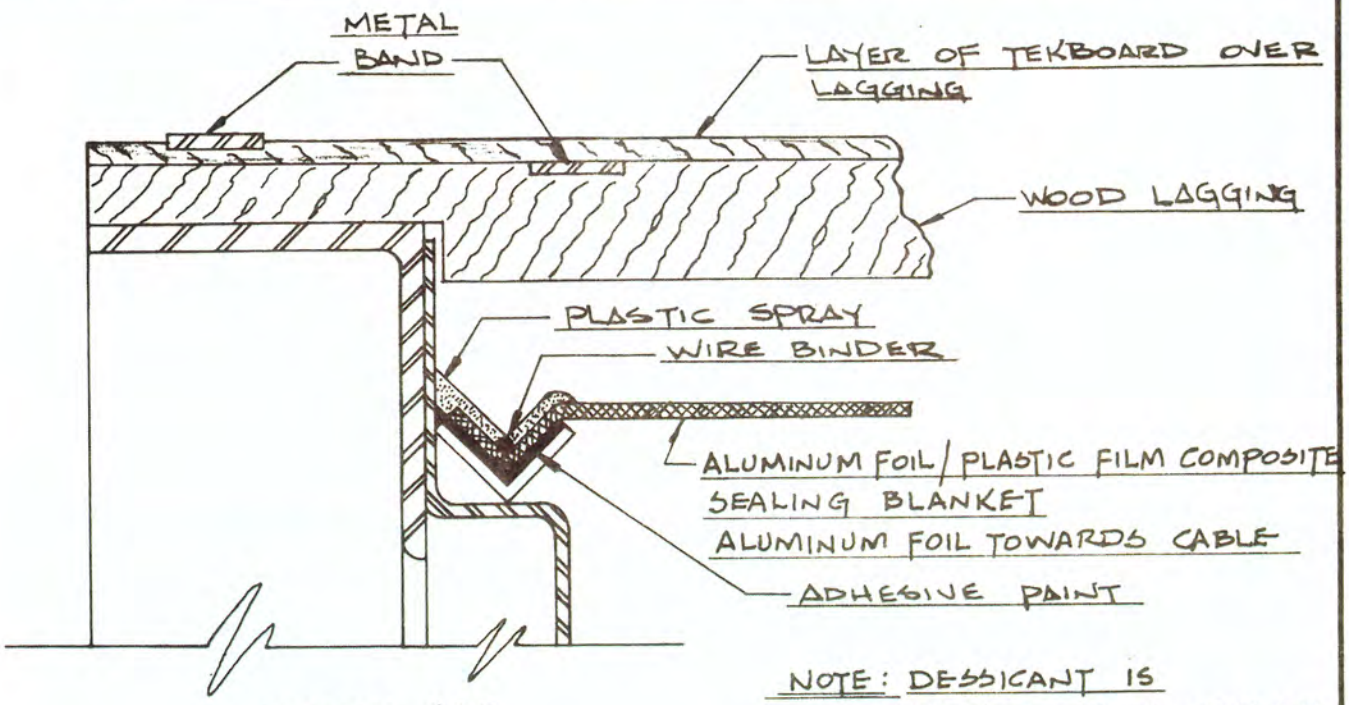

DETAIL "A"
SEALING METHOD

NOTE: DESSICANT IS PACKED INSIDE SEALED AREA OF REEL

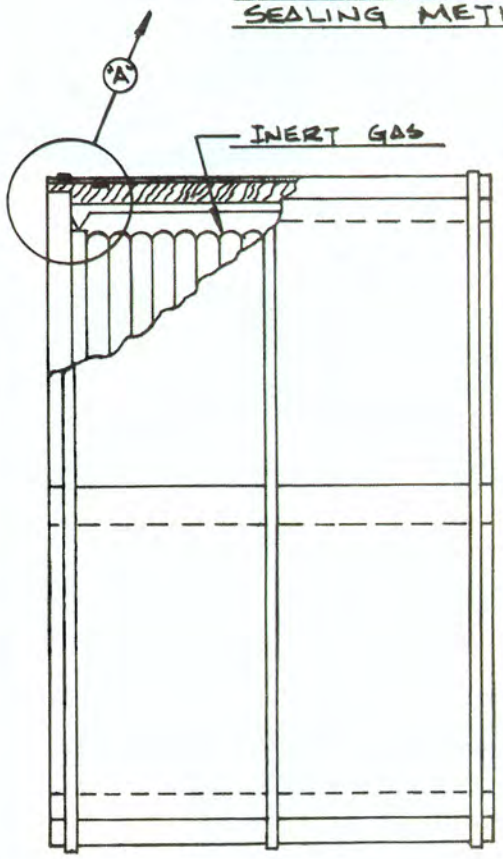

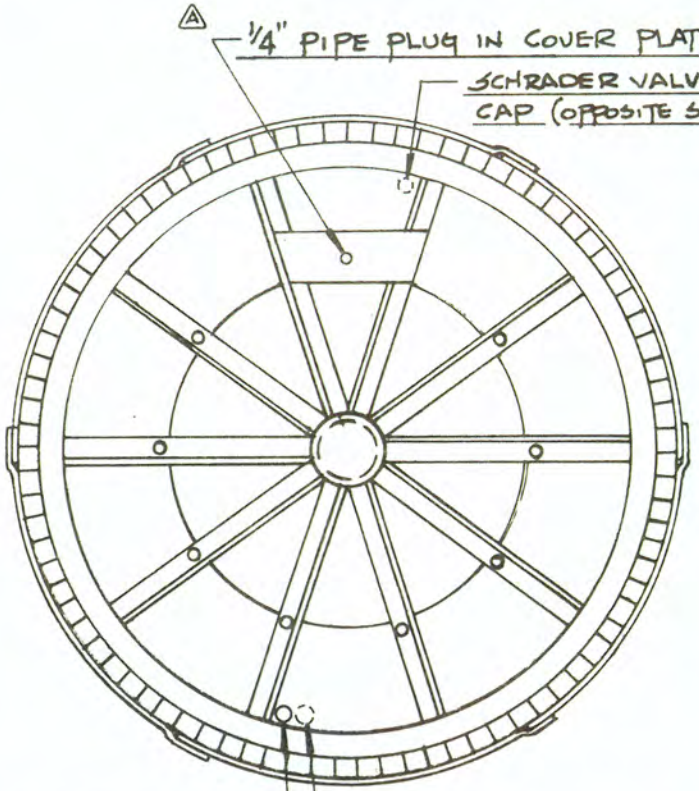

SEALED SHIPPING REEL FOR NON-LEADED OILOSTATIC CABLES

THE OKONITE COMPANY RAMSEY. N.J.. U.S.A.	DATE 6-15-76 SCALE NTS DR. J.E.R. TR. CH. APP. J.J.	REVISIONS A 7/1/76 DRAWING NO. OS-7210

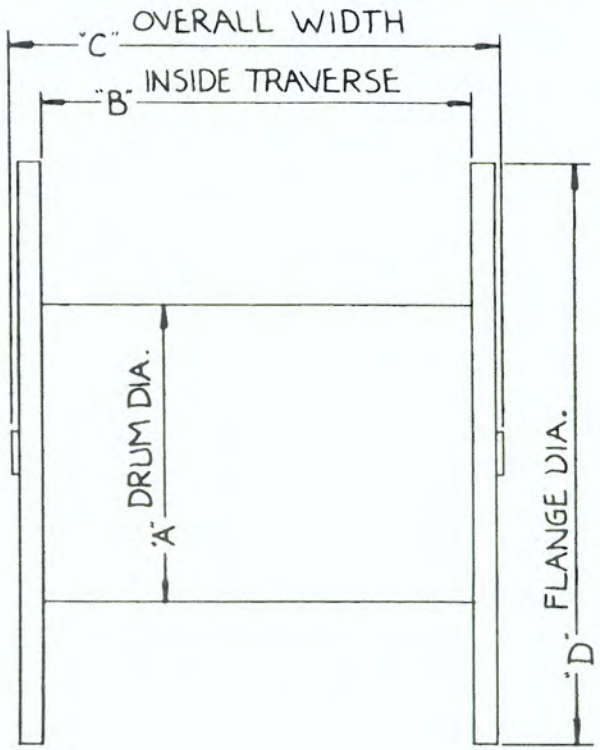

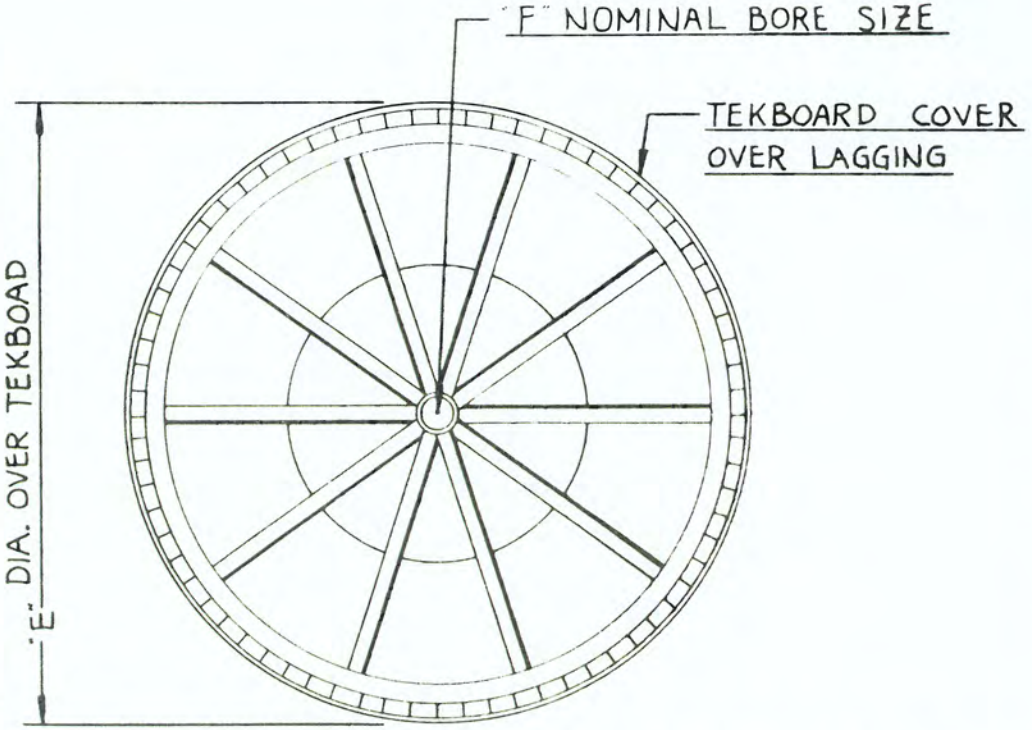

NOTE: DIMENSIONS IN INCHES

REEL Nº	REEL SIZE	A	B	C	D	E	F	REEL WEIGHT	REEL + LAG WEIGHT
1	96 × 60 × 56	56	60	71	96	102	5¼	2160 #	3560 #
2	96 × 60 × 60	60	60	74	96	102	5¼	2500 #	3900 #
3	96 × 54 × 56	56	54	67	96	102	5¼	1835 #	3100 #
4	96 × 54 × 60	60	54	69	96	102	5¼	2480 #	3740 #
5	108 × 60 × 60	60	60	75	108	114	5¼	2920 #	4580 #
6	112 × 72 × 72	72	72	87	112	118	5¼	3250 #	5380 #
7	120 × 72 × 72	72	72	87	120	126	5¼	3650 #	5950 #
8	142 × 82 × 90	90	82	96	142	148	6¼	6475 #	9625 #
9	142 × 82 × 96	96	82	97	142	148	6¼	6500 #	9650 #

REFER TO DWG. Nº OS-7210 FOR SEALING DETAILS

REVISION	BY	DATE	DESCRIPTION
D			
C			
B			
A			

MACHINING TOLERANCES UNLESS OTHERWISE SPECIFIED

THE OKONITE CO.
RAMSEY N J

DATE 6-15-76
SCALE NTS
DRAWN
CHECKED
APPROVAL

TITLE
STANDARD OILOSTATIC STEEL SHIPPING REEL W LAGGING

DRAWING NO
OS-7211

SHEET OF

SECTION 4

THE OKONITE COMPANY
Ramsey, New Jersey

OILOSTATIC NORMAL JOINT INSTALLATION

_____ KCM COPPER, _____ INSULATION, T & B CONNECTOR

1.0 SCOPE

The intent of this specification is to cover the Okonite Company's recommended practice for splicing the three 1/C Oilostatic cables and assembly of the joint.

At this stage of the work, the cable has been installed both ways in the manhole. The night caps are attached and temporary bypass connections have been installed between both night caps. The pipe containing cable has been evacuated and filled with nitrogen. The bypass connection permits a continuous flow of nitrogen gas between the installed sections of cable. The alternate method is to have nitrogen tank and gauges connected to each individual pipe section.

NOTE: Splicing sleeves must be cleaned and positioned over the reducers just prior to cable splicing after night caps have been removed.

2.0 REFERENCE DRAWINGS

Refer to the Cable Splice drawings, Normal Joint drawings, and Lists of Materials furnished for this installation. Reference should be made also to the Cable Cross Section drawing.

3.0 PHASING OUT

It is imperative that cables be checked for proper phase-out in the last manhole, prior to pressing of the connectors.

4.0 PREPARATIONS FOR SPLICING

The splicing of Pipe-Type Cables requires the same diligent care and capable workmanship as is necessary in the splicing of all high voltage cable.

It is recommended that the cable splicers study the drawings and instructions carefully prior to starting work and a copy of the Joint Assembly and Splice drawings should be fastened to the manhole

wall in front of the cable splicers for ready reference. It may also be desirable to mount another copy of these drawings on cardboard or small piece of plywood for ready reference.

All manholes and/or splice areas shall be adequately lighted, cleaned, dried and protected from inclement weather by a temporary structure, tent or trailer placed over the manhole opening or splice area. Splash rings shall be sealed in manhole openings. In areas where humid conditions exist, (above 50%) portable air-conditioning should be added to decrease the possibility of moisture entering the splice. Temperature in the manhole should be maintained at about 70 F. Rubber gloves are provided with splicing material but need not be used if temperature and humidity are low enough to prevent perspiration on splicers' hands.

4.1 MATERIALS

All required materials should be on the site, accounted for and made available for immediate use. This shall include all the items on the "List of Splicing Material", all the items on the "Assembly-List of Material" and the following:

Dry varnished cambric and crepe paper tape for miscellaneous use.
1, 1, 1 Trichloroethylene - Inhibited Grade
G.E. Non-Acid soldering flux sticks
Oil approved for flushing etc.
Aloxite Cloth
Saran Wrap
50/50 String Solder

4.2 TOOLS

In addition to the above materials, the following tools are required.

Weights
Complete splicer's kit
Hydraulic press with the proper dies
Double boiler for heating oil
Small furnace
Thermometers (0-250°C) and (0 - 100°F)
Nitrogen gas with regulating equipment and flow gauge
Supply of clean dry rags
Blower, power driven
Welding equipment
Vacuum pump, hoses, traps, gauges, etc.
Dehumidifier
Mine Safety Lamp
Accurate Humidity Guage or Humidity Recorder

NOTE: All material, tools and equipment used during the splice operation shall be thoroughly cleaned before each use in a manner that will insure against contamination of the cable splice or oil. All tools, materials and other equipment that are used in the splice or may contact the inner surface of the joint parts (i.e. reducers and sleeves, etc.) shall be maintained in a dry atmosphere before and during the entire splice operation.

5.0 PRECAUTIONS

A power driven blower should be operating in the manhole to expel any nitrogen gas. A mine safety lamp or other gas detection device must be kept in the manhole.

A slight positive nitrogen pressure must be maintained in the cable pipes on both sides of joints.

It is of prime importance that moisture be excluded from the exposed cable during splicing operations. Cable splicers should not do any work on the cable or handle tools or materials used in splicing while their hands are moist or perspiring.

Do not bend the cable to a radius of less than 20 times its diameter.

Cables must be supported at all times.

6.0 SPLICING OPERATIONS

Step No. 1

When proper humidity and temperature conditions in the manhole have been attained, carefully remove one of the night caps and support the cables. Insert clean, dry lintless rags into the reducers to cushion and protect the cables and temporarily restrict the flow of nitrogen.

Step No. 2

Slide joint sleeve(s) back on the pipe over the reducer.

Step No. 3

Solder tack the "D" wire to the metal shielding tape at the edge of the reducer. Upon completion of this operation, remove the rags.

Apply enough varnished cambric tape over the cable in the area of the reducers where the temporary barrier will seal off the cables from the pipe line, to a dimension that will permit the barrier to slide over the cable and make a seal at the reducer. Align the holes in the rubber barrier with the threaded holes in the reducer. Slide the rubber barrier over the three cables up to the reducer. Position the steel split rings over the barrier and tighten in place with the cap screws. Apply the hose clamps on the lips of the rubber barrier, tighten and make a varnished cambric seal to prevent any nitrogen from leaking into the manhole.

Step No. 4

Force three turns of "D" wire together, bind with 1/4" tinned copper braid, and solder at distance from reducer shown on splice drawing. Cut off the remaining "D" wire after allowing 18" from the "D" wire to be clamped in the servit post that is screwed in the reducer. Temporarily seal the ends of the cable with Saran Wrap. Follow the same procedure for the other two cables. A 1/4" valve, petcock, cap or pressure gauge can be attached to the nipple in the rubber barrier.

Step No. 5

Remove the opposite remaining night cap and repeat the above procedure.

Step. No. 6

Check alignment of reducers and jack and block into position if necessary.

Step No. 7

Determine the center line between the reducers. This will be the reference point of the splice.

The order of splicing the conductors is: First, the bottom back conductor, second, the bottom front conductor, last the top conductor.

Select the four cable ends which are not to be spliced first and carefully fasten them out of the way, observing all precautions as previously described. Then align the two remaining ends for splicing. Having already determined the center of the joint between the reducers, measure and mark the cables 2-3/4" off center. Cut long cable at this off-center point. Position second end and add 1-1/2" to short cable (overlap) and cut.

Step No. 8

Remove the metal shielding tape, paper insulation, metallized papers and metal binder tape over conductor on each cable end for _____".

Remove the center and outer fillers and the paper tape on the insulated segments. Use hacksaw blade to expedite removal of center filler.

Step No. 9

Cut adjacent segments back for 1-1/2" on one cable end and the diametrically opposite segments for the same distance on the other cable end (as shown on the splice drawing).

Step No. 10

Insert a No. 6 AWG copper wire (3" long) in the center space between segments.

Step. No. 11

Flush conductors and connector with hot oil (220°F).

Step No. 12

On the long cable end, cut back the metal shielding tape and paper insulation _____" from the previous _____" measurement.

NOTE: Do not cut or destroy the metallized paper or metal binder tapes next to the conductor. Remove only enough insulation to allow the connector to slide over the cable and wrap the remaining tapes with cellophane tape to hold them in position.

If the connector will not slide over the metal binder and metallized paper tapes, it will be necessary to carefully unwrap them one at a time as far as possible and tie them out of the way. Observe lay

(gap spacing) of the tapes as they were applied in the factory so that they may be re-applied later in the same manner. It may also be necessary to lay back the outer fillers.

On the short end, remove the paper insulation to approximate OD of connector for _____" from the previous _____" measurement. Wrap the remaining tapes with cotton or cellophane tape.

Step No. 13

Slide connector over long cable end, bring two cable ends together and position connector.

(Replace the fillers and metal binder tape if they were unwrapped, being sure to cut the ends on a bias so that they will fit squarely against the end of the connector after it is pressed. Solder tack the metal tape to segments to hold it in position.)

Apply a layer of varnished cambric tape over tapes on each side of the connector and bind with wire or hose clamps to prevent "bird caging" of strands during application of connector.

Step No. 14

With Hexing die make first compression at center of connector, continue right and left of first press, overlapping preceding compressio 1/16". Continue this operation until connector is pressed. The head of the hydraulic press must be kept aligned and perpendicular to the connector and its weight must be supported at all times. Keep training cables to prevent offset bends due to elongation during applicatio of connector.

Step No. 15

Place Rounding die at center compression, position splits in die over flat side of the hexagon (see Splice Drawing). Compress right to left This minimizes the shearing of copper and prevents reduction of the connector thickness.

Rotate Rounding die and press 90°, and repeat this operation.

Step No. 16

Place a reference mark on the connector 1-1/4" from one end. Place Tapering die on this mark and press. Remove excess copper, rotate head 90°, measure, and press again. Repeat on the other end of the connector.

Remove irregularities with a file or belt sander and polish with Aloxite cloth. Flush the connector with hot oil (220°F).

Step No. 17

Remove the binding clamps and varnished cambric tape. (If the metallized paper tapes were unwrapped on the long cable end, replace these tapes following the same procedure used in replacing the metal binder.)

Step No. 18

On the long cable end (right side) measure back _____" from the previously cut insulation and mark with a good tight wrap of cotton tape. Remove the metal shielding tape, and metallized paper tape for this distance. Using a looped piano wire held down firmly with lead weights (attached to the ends of the piano wire) loop the wire around the insulation at the above mentioned mark and start stepping as follows: (using 1/8" steps and removing one paper tape at a time).

1. Remove only 8 paper tapes at one time part way. By doing this an accurate count of the papers can be kept. Since 1/8" steps are to be made with each paper tape a check can be made after each series of eight steps to be sure that they equal a correct length of 1" on the stepped insulation.

2. If this procedure is followed continuously the count of the number of units of steps of 8 shall always equal the length of the stepped insulation in inches, keeping in mind that each step is 1/8". (Ex.: 40 steps equal 5" in length on the stepped insulation).

3. It is the usual practice at the start of the job to count the number of tapes on a piece of cable (scrap cable is available after any pulling operation and is suitable for this purpose). If the stepping should be running short, divide the remaining tapes so the _____" stepping distance is maintained. Repeat this for left side.

Step No. 19

After stepping both sides, flush with hot oil (220°F). Now temporarily cover the exposed stepped area with varnished cambric, Saran, or polyethylene tape, starting at the top of the slope working down toward the connector. The taping should be in the same direction as the natural lay of the manufactured cable. Remove metal shielding tape, Mylar and metallized paper tape as per dimensions on splice drawing. Terminate shielding tape keeping a smooth edge and soldering down.

Step No. 20

Apply the lead foil over the ends of the connectors as shown on the splice drawing. Apply a layer of carbon black crepe paper tape over the connector and lead foil as shown on the splice drawing.

Step No. 21

Preheat all the cans of paper tape in a double boiler heater. (This can shall not be in direct contact with any flame.) This facilitates the application of the tape and tends to make a tighter, compact insulating job. There is usually enough free oil on the paper rolls as removed from the can without having to add basting oil. If, however, more oil is needed, add warm oil (oil which has been heated to 220°F and allowed to drop to a temperature of approximately 125°F is desirable).

Step No. 22

Remove the temporary protective wrapping from the stepping on the leg to be permanently taped and apply 1" impregnated crepe paper tape to the diameter of the factory insulation. Be sure to butt the edges of paper against the edges of the stepped insulation.

Step No. 23

Continue to apply 1" crepe paper tape to an outside diameter as noted on the splice drawing (butt lap preferred, 1/2 lap when necessary to control diameter.

During taping make a pencil on both ends to conform to splice drawings. Use taping template supplied with splice kit.

Step No. 24

When the required diameter of the splice joint as shown on the splice drawing is attained, apply a layer of carbon black crepe paper tape over the completed leg, as shown on splice drawing.

Step No. 25

Perforated grounding strips are supplied to hold the copper mesh braid in place. Refer to the splice drawing. These three strips are spaced 120 degrees apart as shown on the splice drawing. Tie down temporarily starting 1" beyond the center line of the joint. Apply one section of the braid by half-lapping to a point of 1" beyond the cable metal shielding tape (as shown on the splice drawing). Tie down and solder the copper braid and ground strips to the metal shielding tape, taking precautions to solder any frayed ends in place. The braid is held in place by the pointed perforations in the grounding strip. Apply the braid for one inch over the previously applied braid and continue to half-lap over the remainder of the splice joint and over the metal cable shielding tape. Press the perforations down over the braid. Solder the braid and perforated grounding strips to the metal shielding tape. All splices in the shielding braid shall be soldered.

Step No. 26

Apply 1/2 lapped layer of cotton tape across the entire joint. Use a double layer of wax paper and wrap it longitudinally across and around the completed joint. Pour oil into the wax paper as it comes around to the top of the leg. Cover the wax paper with the plastic blanket sheet that is supplied in the kit for this purpose. This is a temporary protection during the fabrication of the remaining two joints.

Step No. 27

Use the same procedure on the remaining two joints as outlined in Steps No. 8 through No. 26.

Step No. 28

When splicing on the three phases is completed, remove all protective coverings.

Step No. 29

Set the aluminum spiders in their proper position near the center of the joint as shown on the assembly drawing.

Step No. 30

The rubber barrier is now removed in the following manner. First remove the hose clamps. Second, using a sharp knife or scissors, start by cutting the rubber barrier at the edges of the circular openings around the cables, keeping in mind to always cut away from the insulated conductors to avoid cutting into or damaging the insulation. (HAVE A MANHOLE BLOWER RUNNING TO EXPEL ANY NITROGEN GAS). Check to be certain all rags have been removed from each reducer.

Step No. 31

Apply the Hope Webbing in such a manner as to bind all three joints together and at the same time securing the aluminum spiders firmly and permanently in position, as shown on the assembly drawing.

Step No. 32

Install three servit posts on each reducer.(Refer to the assembly drawing.) Form the "D" wires, allowing sufficient slack and set in position in their respective servit posts.

Step No. 33

Clean the joint sleeves, slide into position, align and support for welding. The center weld shall be made first and then the two end welds on the reducers as shown on the assembly drawing. Extreme care shall be taken during the welding operation of the joint sleeves to insure against damage to splice or cable. During all welding operations, a flow of dry nitrogen gas shall be fed into the splice sleeve in order to prevent heating of the cables or splices, and flush out the joint.

NOTE: POWER DRIVEN BLOWER MUST BE OPERATING AND MINE SAFETY LAMP MUST BE KEPT IN MANHOLE TO PROTECT PERSONNEL.

7.0 PROCEDURE AND SEQUENCE OF OPERATIONS

The instructions given in this manual are intended to cover what might be considered a typical pipe type cable installation. They are not intended to cover every condition which might occur on every installation. It should be recognized that each installation has its own special characteristics and features. Thus, these instructions can be modified or interpreted to cover contingencies at the discretion of the Okonite Field Advisor and/or the owner's Engineering Department representative.

JTZ/row
3/78

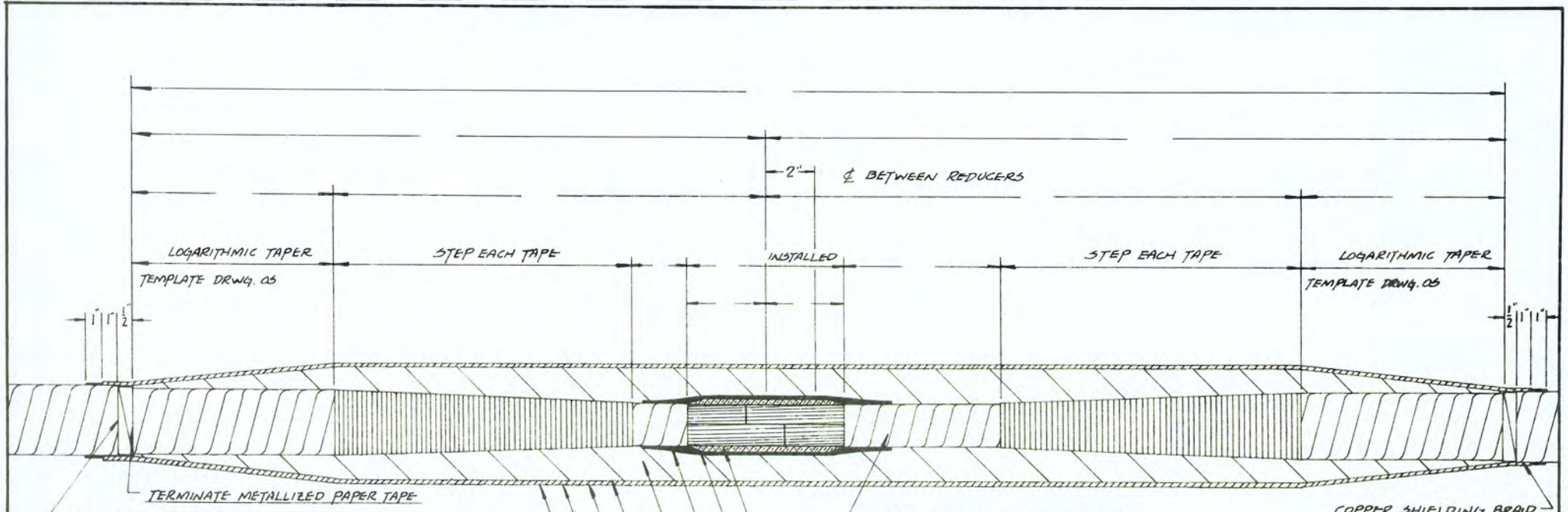

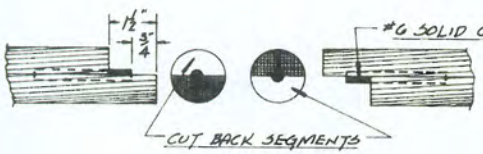

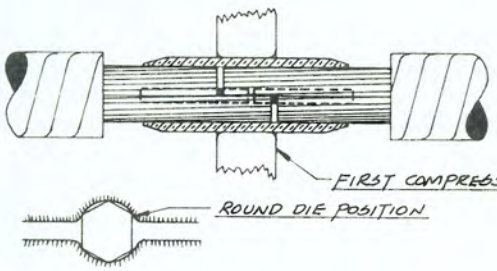

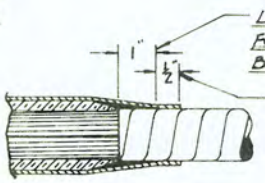

DETAIL

PREPARATION OF CONDUCTOR

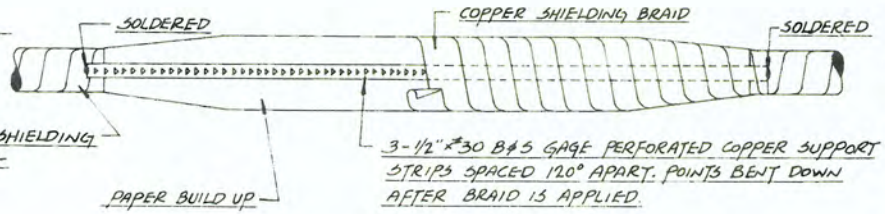

APPLICATION OF PERFORATED COPPER SUPPORT STRIPS

REVISION	BY	DATE	DESCRIPTION
D			
C			
B			
A			

MACHINING TOLERANCES UNLESS OTHERWISE SPECIFIED

DEC.	FRACT.	ANG.
± .005	± 1/64	± 1°

1/32 MAX TOOL RAD | ✓ DENOTES RMS FINISH

THE OKONITE CO.
RAMSEY, N. J.

PROPERTY OF THE OKONITE CO. TO BE RETURNED UPON REQUEST AND USED ONLY IN REFERENCE TO CONTRACTS OR PROPOSALS OF THE CORPORATION. REPRODUCTION OF THIS PRINT OR UNAUTHORIZED USE OF PATENTED OR PATENTABLE FEATURES DISCLOSED HEREON IS PROHIBITED.

DATE
SCALE NTS
DRAWN
CHECKED
APPROVAL

TITLE
SPLICE FOR MCM WALL PAPER INSUL. OILOSTATIC CABLE (COPPER CONDUCTOR)

DRAWING NO. OS-

SHEET OF

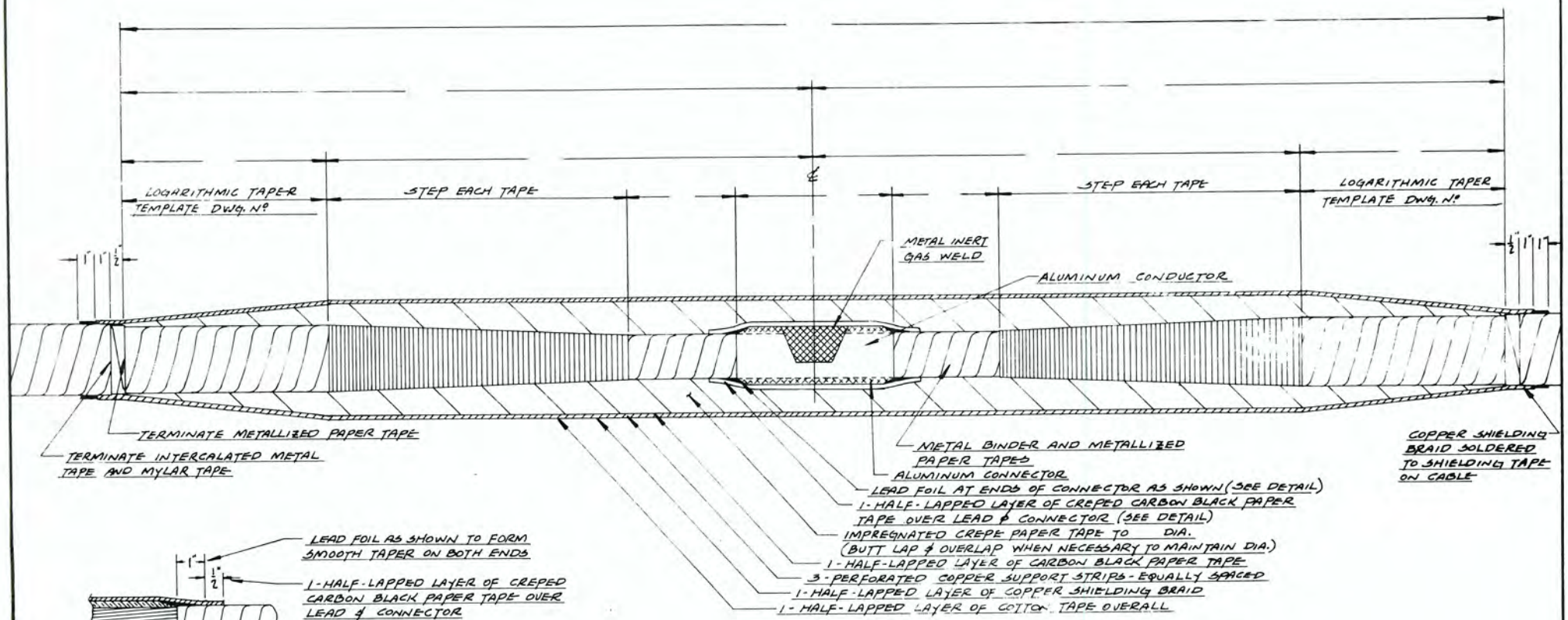

DETAIL

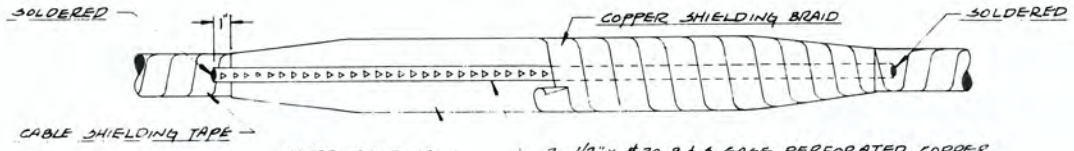

APPLICATION OF PERFORATED COPPER SUPPORT STRIPS

REVISION	BY	DATE	DESCRIPTION
D			
C			
B			
A			

THE OKONITE CO.
RAMSEY, N. J.

DATE
SCALE NTS
DRAWN
CHECKED
APPROVAL
DRAWING NO OS-L
SHEET OF

TITLE
SPLICE FOR NOM. WALL PAPER INSULATED OILOSTATIC CABLE ALUMINUM CONDUCTOR)

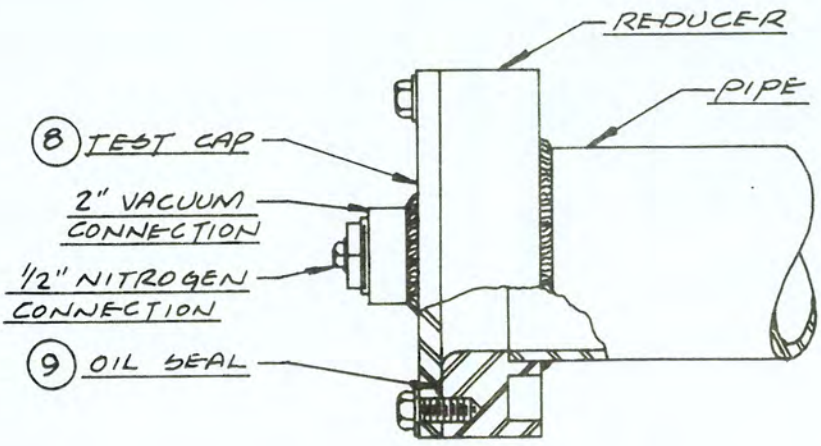

PRESSURE TEST ON LINE PIPE

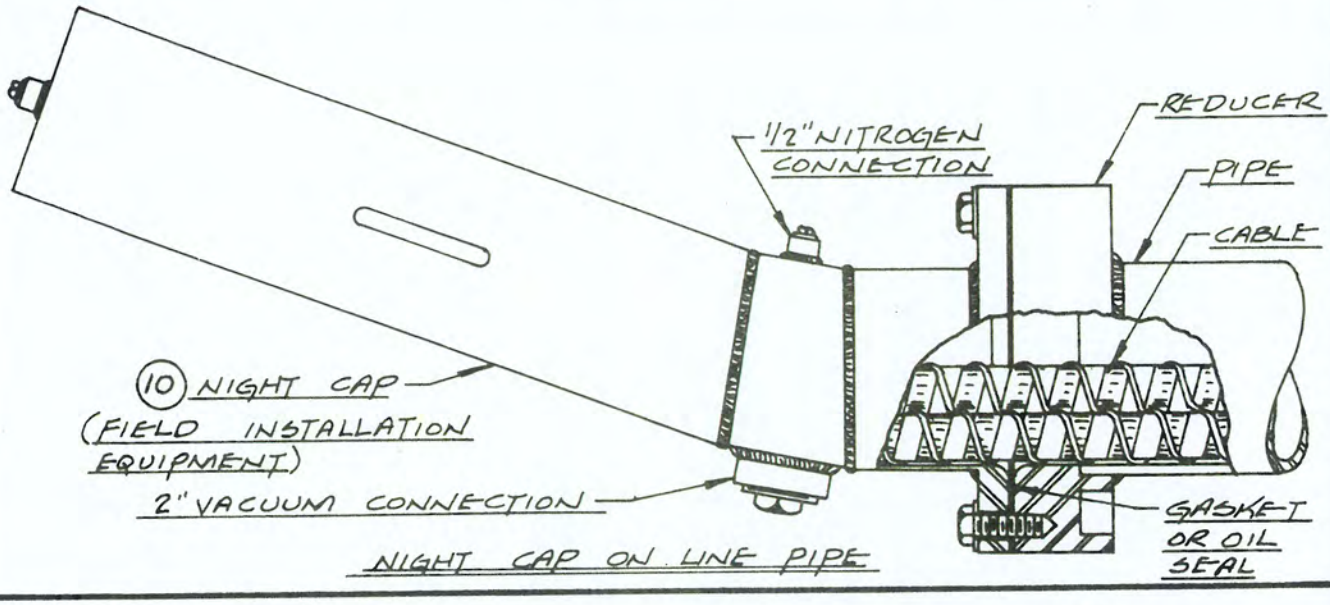

NIGHT CAP ON LINE PIPE

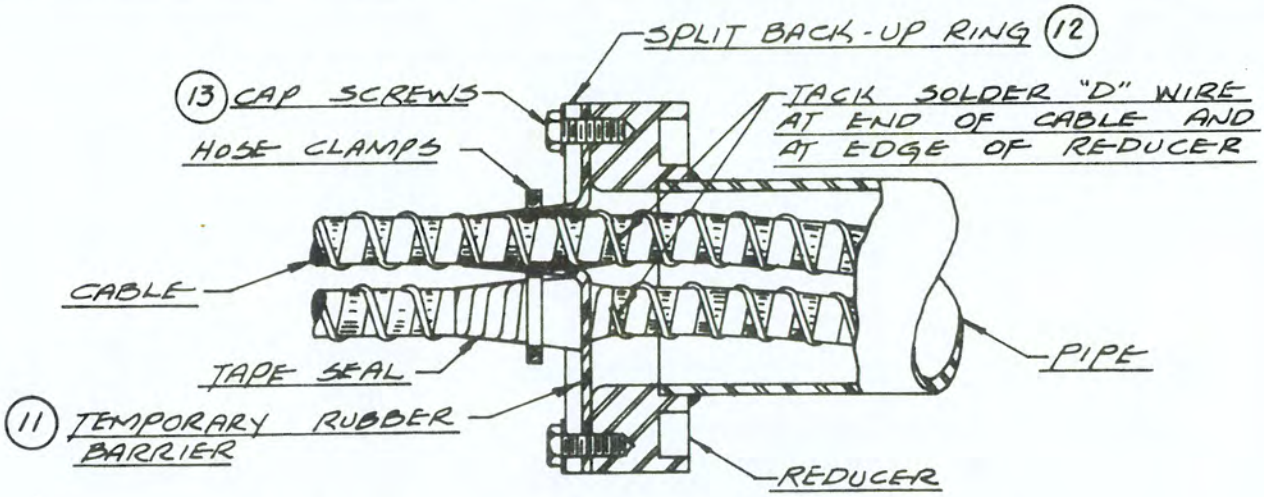

TEMPORARY SEALING ARRANGEMENT WHEN SPLICING CABLE

"OILOSTATIC" ASSEMBLY - INSTALLATION EQUIPMENT - PIPE & CABLE JOINT

THE OKONITE COMPANY WIRE AND CABLE DIVISION RAMSEY, N.J.	DATE 12-5-56	SCALE NTS	REVISIONS
	DR. CLP	TR. JER.	DRAWING NO. 05-4285
	CH. NRW.	APP.	

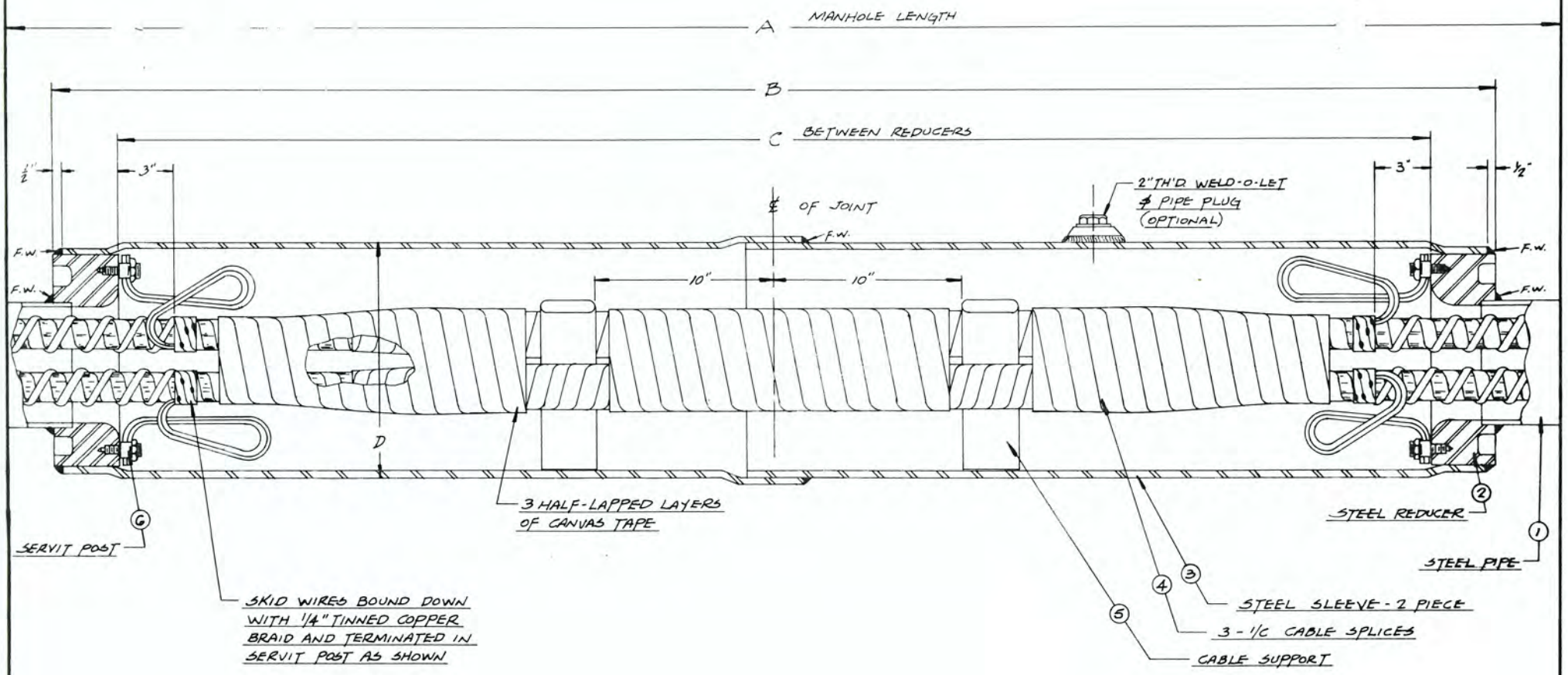

NOTES

1. REFER TO LIST OF MATERIALS FOR ABOVE ITEM NUMBERS
2. 2" WELD-O-LET FOR VENTING, VACUUM TREATING AND/OR OIL FILLING

FIG. Nº	VOLTS KV.	DIMENSIONS			
		A	B	C	D
1	69 KV.	14'-0"	67"	60"	12 3/4"
2	115 KV.	14'-0"	79"	72"	12 3/4"
3	138 KV.	15'-0"	91"	84"	14"
4	161 KV.	15'-0"	91"	84"	14"

REVISION	BY	DATE	DESCRIPTION
D			
C			
B			
A	STR	7-21-76	REVISED CANVAS TAPING

MACHINING TOLERANCES UNLESS OTHERWISE SPECIFIED
DEC ± .005 | FRACT ± 1/64" | ANG. ± 1°
1.32 MAX THDL RAD | ✓ DENOTES RMS FINISH

PROPERTY OF THE OKONITE CO. TO BE RETURNED UPON REQUEST AND USED ONLY IN REFERENCE TO CONTRACTS OR PROPOSALS OF THE OKONITE CO. REPRODUCTION OF THIS PRINT OR UNAUTHORIZED USE OF PATENTED OR PATENTABLE FEATURES DISCLOSED HEREON IS PROHIBITED

THE OKONITE CO.
RAMSEY, N.J.

DATE 4-25-73
SCALE NTS
DRAWN JER
CHECKED
APPROVAL

TITLE
OILOSTATIC
ASSEMBLY NORMAL JOINT

DRAWING NO.
OS-7001

SHEET OF

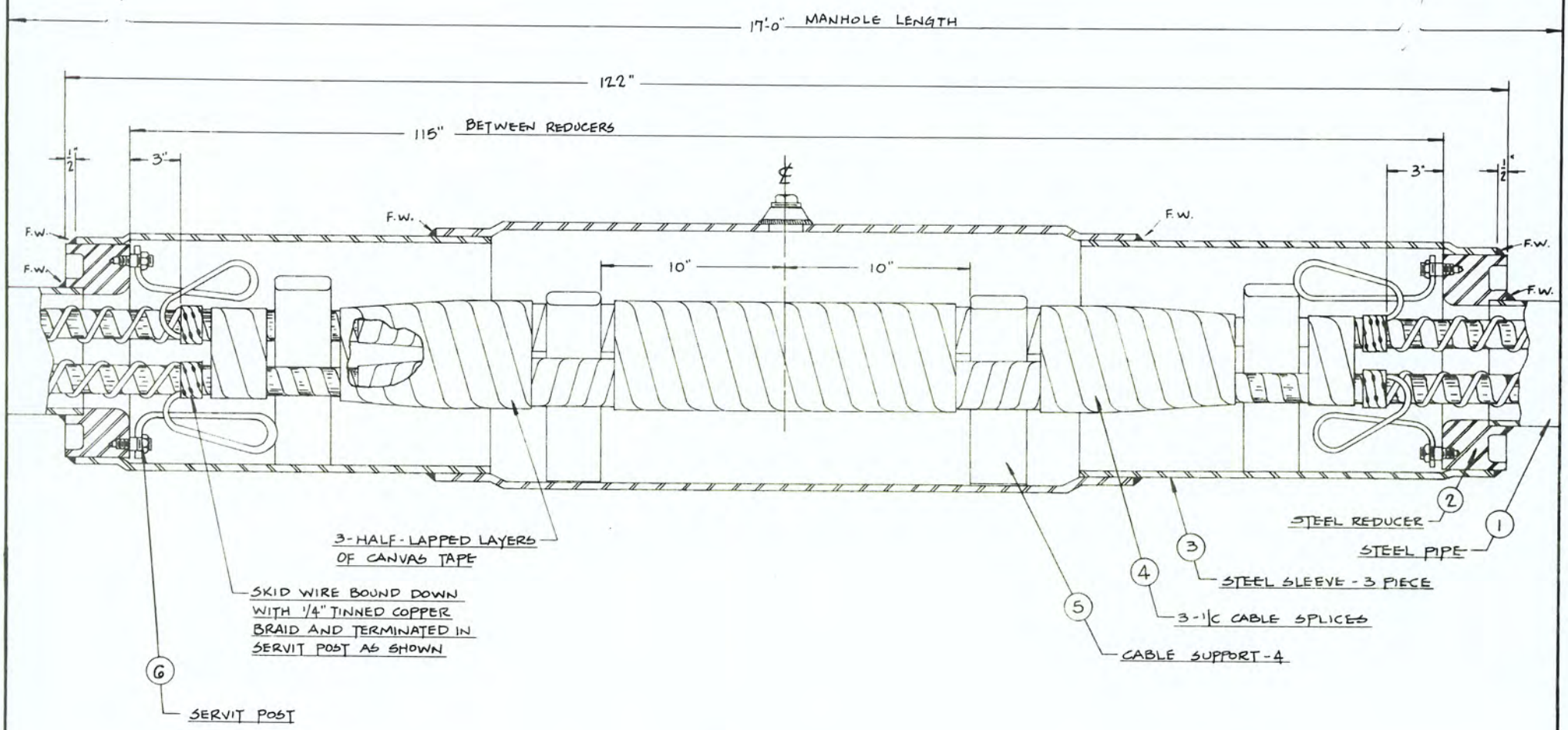

NOTE

1. REFER TO LIST OF MATERIALS FOR ABOVE ITEM NUMBERS
2. 2" WELD-O-LET FOR VENTING, VACCUM TREATING AND/OR AUXILIARY OIL FILLING

REVISION	BY	DATE	DESCRIPTION
D			
C			
B			
A	JJZ	7-21-72	REVISED CANVAS TAPING

MACHINING TOLERANCES UNLESS OTHERWISE SPECIFIED
DEC ± .005 | FRACT ± 1/64" | ANG ± 1/2°
1/32 MAX TOOL RAD | ✓ DENOTES RMS FINISH

THE OKONITE CO.
RAMSEY, N.J.

PROPERTY OF THE OKONITE CO. TO BE RETURNED UPON REQUEST AND USED ONLY IN REFERENCE TO CONTRACTS OR PROPOSALS OF THE CORPORATION. REPRODUCTION OF THIS PRINT OR UNAUTHORIZED USE OF PATENTED OR PATENTABLE FEATURES DISCLOSED HEREON IS PROHIBITED

DATE 10-10-73
SCALE NTS
DRAWN
CHECKED
APPROVAL

TITLE
230 Kv. ASSEMBLY
NORMAL JOINT

DRAWING NO.
OS-7016

SHEET OF

SECTION 5

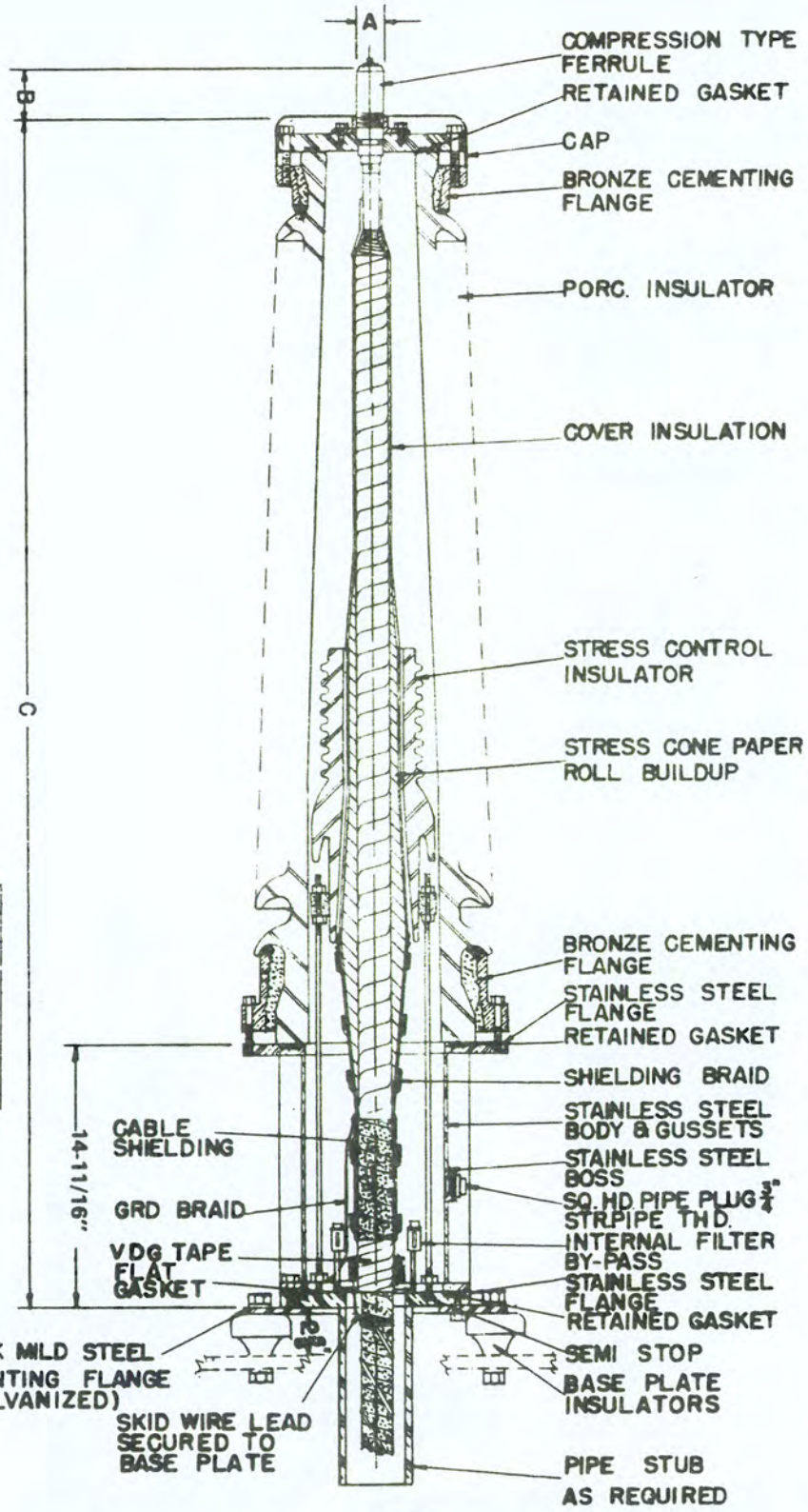

MOUNTING PLATE

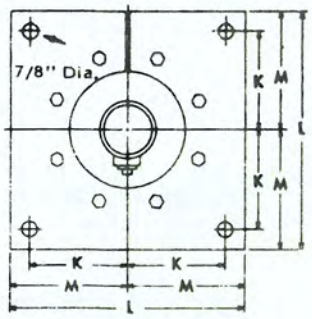

CAT. NO.	DIMENSIONS K	L	M
ATA-119N	6¾"	15½"	7¾"
ATA-110N	6¾"	15½"	7¾"
ATA-129N	6¾"	15½"	7¾"
ATA-120N	6¾"	15½"	7¾"
ATA-139N	6¾"	15½"	7¾"
ATA-130N	6¾"	15½"	7¾"

NOTE:
BODY DIMENSION IS 15 7/8" ON CAT. NO. ATA 119N NOT 14 11/16" AS SHOWN

CAT. NO.	KV	BIL (KV)	MAX. CABLE SIZE MCM	DIMENSIONS A	B	C
ATA-119N	69	350	1500	2-1/8"	2-3/4"	49-3/16"
ATA-110N	69	350	3000	2-1/8"	2-3/4"	52-5/16"
ATA-129N	92	450	1500	2-1/8"	2-3/4"	52-5/16"
ATA-120N	92	450	3000	2-1/8"	2-3/4"	61-5/16"
ATA-139N	115	550	1500	2-1/8"	2-3/4"	61-5/16"
ATA-130N	115	550	3000	2-1/8"	2-3/4"	67-7/16"

TYPE "ATA" SINGLE CONDUCTOR
69KV, 92KV AND 115KV 200 P.S.I.
OIL PRESSURE POTHEAD

DRAWN 8-14-70	DW'G No. PRL 5-70-5A
CH'K'D	CAT. No.
APPROVED	SCALE

Printed in U.S.A. (Q)

G&W

MOUNTING PLATE

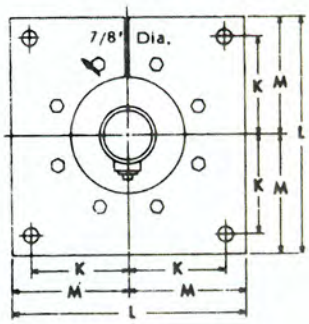

CAT. NO.	DIMENSIONS		
	K	L	M
ATA-149N	6¾"	15½"	7¾"
ATA-140N	7½"	18"	9"
ATA-159N	7½"	18"	9"
ATA-150N	7½"	18"	9"

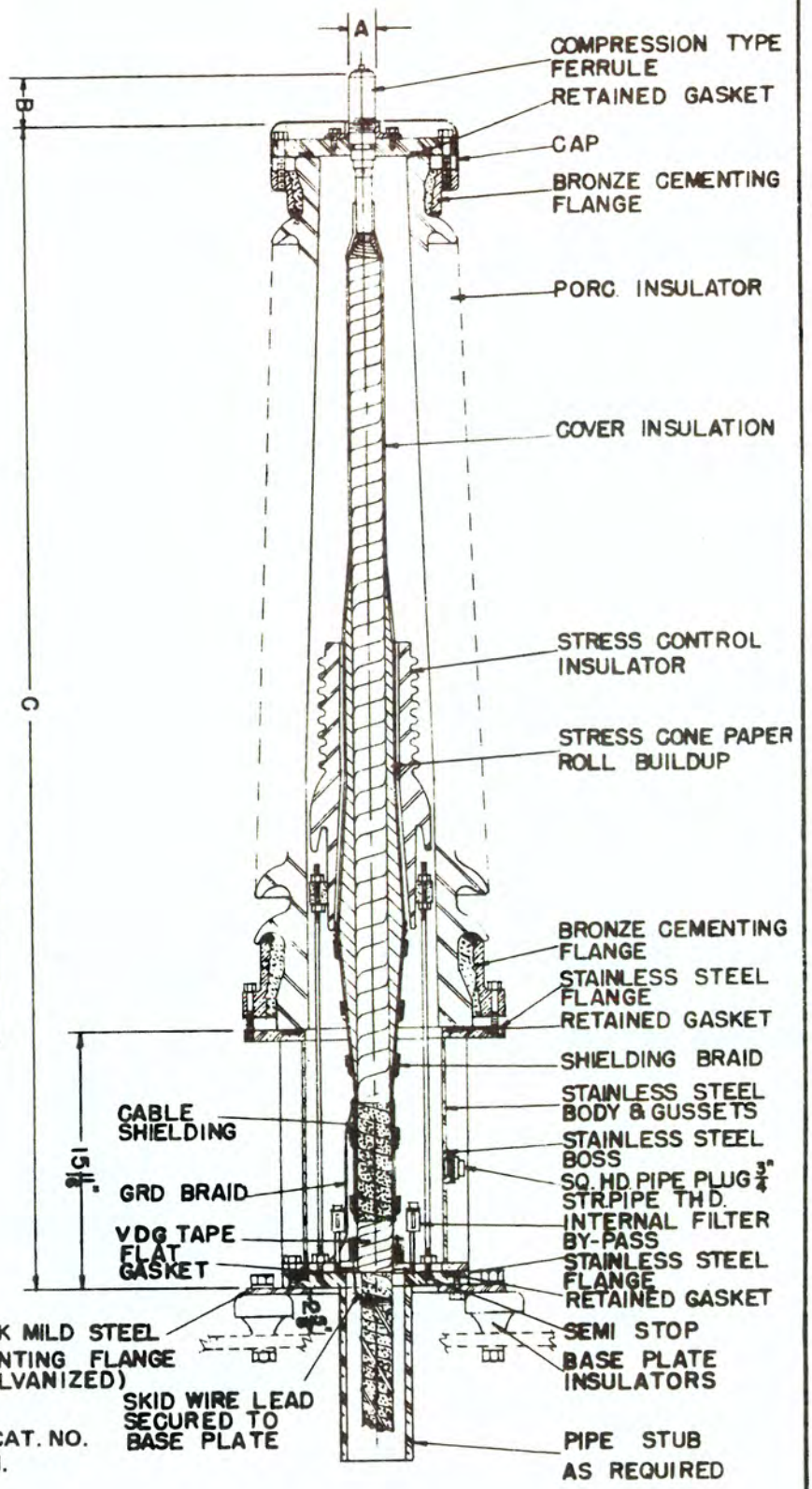

NOTE:
BODY DIMENSION IS 14-11/16" ON CAT. NO. ATA 149N NOT 15-11/16" AS SHOWN.

CAT. NO.	KV	BIL (KV)	MAX. CABLE SIZE MCM	DIMENSIONS A	B	C
ATA-149N	138	650	1500	2-1/8"	2-3/4"	67-7/16"
ATA-140N	138	650	3000	2-1/8"	2-3/4"	77-5/16"
ATA-159N	161	750	1500	2-1/8"	2-3/4"	77-5/16"
ATA-150N	161	750	3000	2-1/8"	2-3/4"	83-5/16"

TYPE "ATA" SINGLE CONDUCTOR 138KV AND 161KV 200P.S.I. OIL PRESSURE POTHEAD

DRAWN B-13-70	DW'G No. PRL5-70-5
CH'K'D	CAT. No.
APPROVED	SCALE

Printed in U.S.A. (Q)

OHIO BRASS

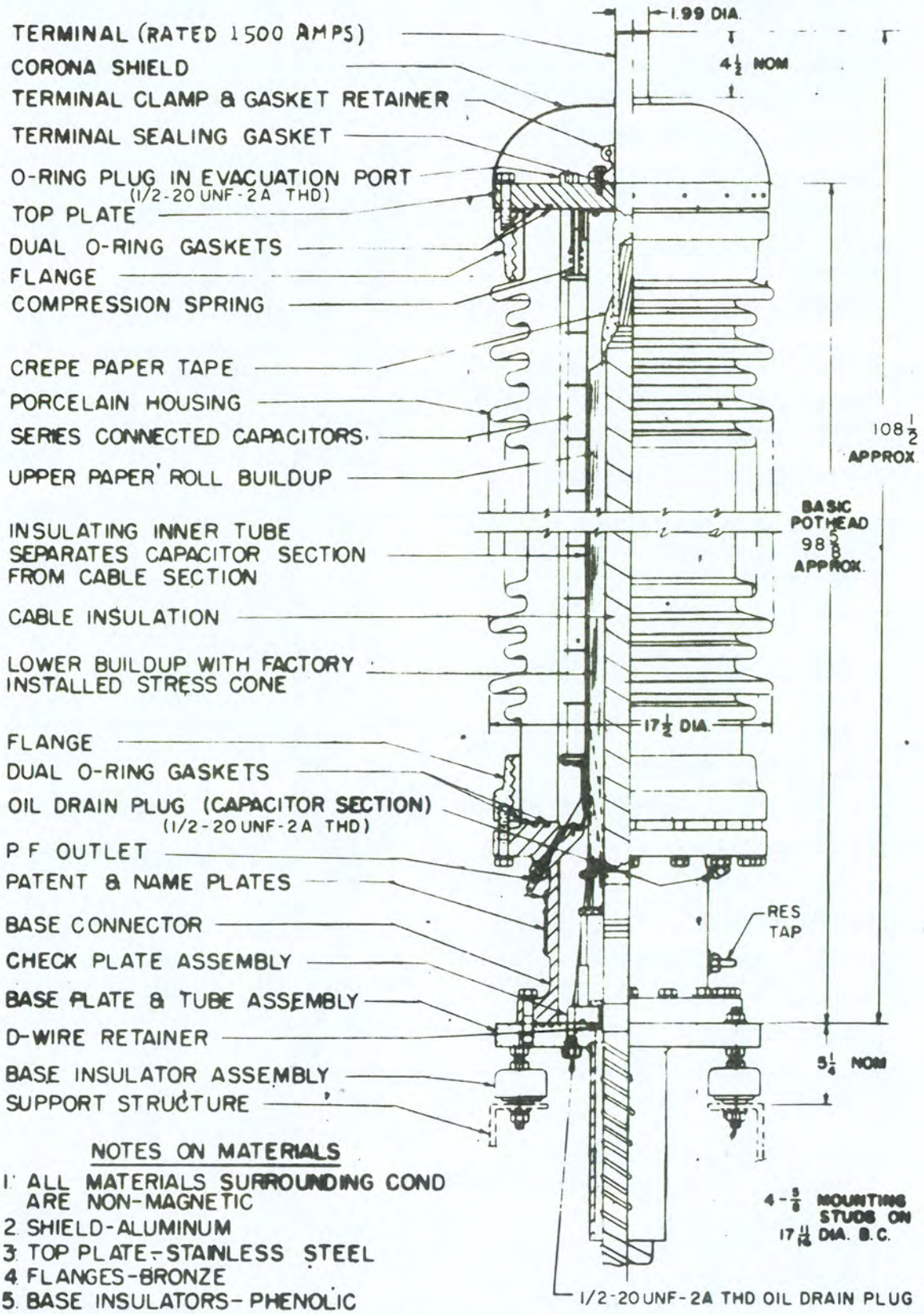

NOTES ON MATERIALS

1. ALL MATERIALS SURROUNDING COND ARE NON-MAGNETIC
2. SHIELD-ALUMINUM
3. TOP PLATE-STAINLESS STEEL
4. FLANGES-BRONZE
5. BASE INSULATORS-PHENOLIC

POTHEAD ASSEMBLY-230 KV

3000 MCM CONDUCTOR MAX

RATED OPERATING PRESSURE 200 PSIG

BASIC INSULATION LEVEL 1050 KV

MANSFIELD, OHIO

ISSUE | DATE

DRAWING NUMBER Q1-0029

CODE 3001

OHIO BRASS

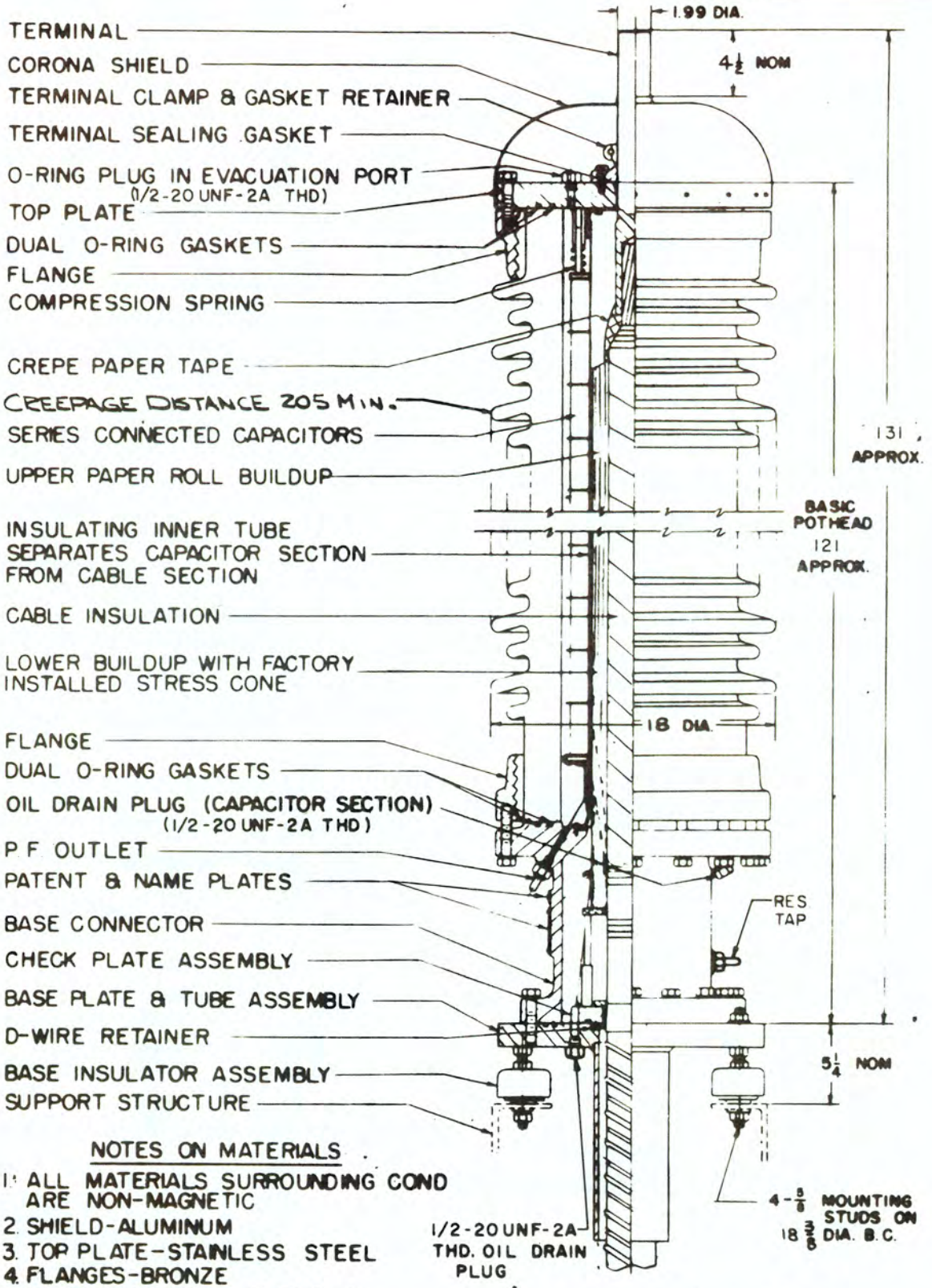

NOTES ON MATERIALS

1. ALL MATERIALS SURROUNDING COND ARE NON-MAGNETIC
2. SHIELD-ALUMINUM
3. TOP PLATE-STAINLESS STEEL
4. FLANGES-BRONZE
5. BASE INSULATORS-PHENOLIC

APPROX. TOTAL WEIGHT 1400#

POTHEAD ASSEMBLY-345 KV

3000 kcmil COND MAX 1050 KV BIL
RATED OPERATING PRESSURE 200 PSIG
SWITCHING SURGE WITHSTAND 850 KV

MANSFIELD, OHIO

ISSUE	DATE
B	4-23-73

DRAWING NUMBER	CODE
Q 1.0 0.2 5	3.0.0.1

SECTION 6

THE OKONITE COMPANY

PROPERTIES OF POLYBUTENE PIPE OIL

PROPERTIES	ASTM METHOD	REQUIREMENT
A. Physical		
Specific Gravity (60/60F)	D-287	0.84 - 0.87
Flash Point, °F	D-92	310 Min.
Pour Point, °F	D-97	-25 Max.
Viscosity, SSU	D-446	
@ 100 F		500 - 620
@ 210 F		60 - 66
Color		
Initial	D-1500	1 Max.
After 96 hrs. @ 115C	D-1934	1.5 Max.
Coefficient of Expansion		0.00061/°C
B. Chemical		
Neutralization No., mg KOH/g		
Initial	D-664	0.02 Max.
After 96 hrs. @ 115C	D-1934	0.09 Max.
Chlorine		
Organically bound, %, Wt.	SM	0.004 Max.
Inorganic Chlorides	D-878	Nil
Sulphur, Free	D-989	Nil
Sulphur, Total, %, Wt.	D-1552	0.01 Max.
Water Content, ppm	D-1533	30 Max.
C. Electrical		
Dielectric strength, KV @ 25C	D-877	30 Min.
% Power factor (100 tanδ), 60 HZ, 100C		
Initial	D-924	0.05 Max.
After 96 hrs. @ 115C	D-1934	0.10 Max.

11/6/73

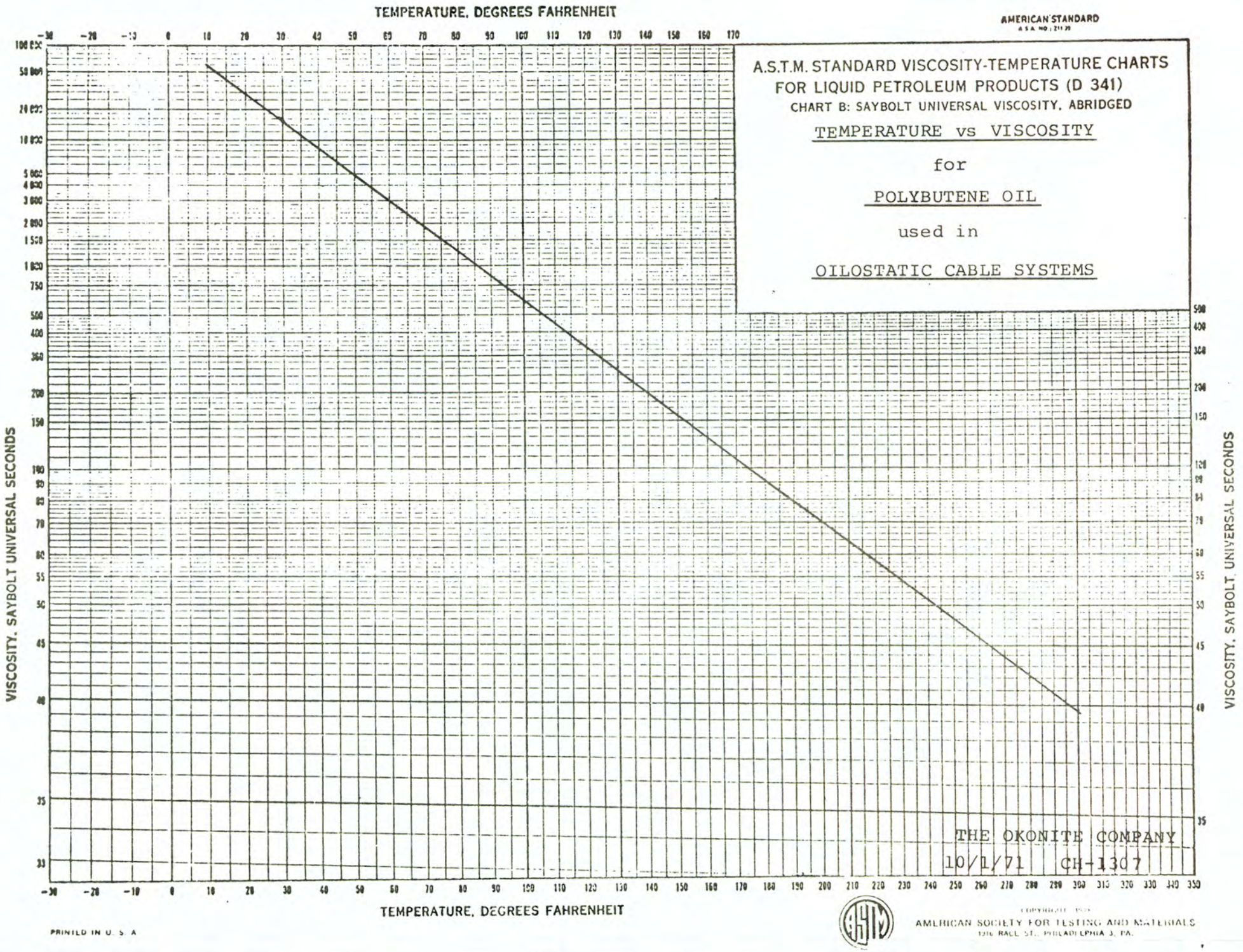
TEMPERATURE, DEGREES FAHRENHEIT
AMERICAN STANDARD
A.S.A. NO. Z11.29
A.S.T.M. STANDARD VISCOSITY-TEMPERATURE CHARTS
FOR LIQUID PETROLEUM PRODUCTS (D 341)
CHART B: SAYBOLT UNIVERSAL VISCOSITY, ABRIDGED
TEMPERATURE vs VISCOSITY
for
POLYBUTENE OIL
used in
OILOSTATIC CABLE SYSTEMS
VISCOSITY, SAYBOLT UNIVERSAL SECONDS
THE OKONITE COMPANY
10/1/71 CH-1307
TEMPERATURE, DEGREES FAHRENHEIT
PRINTED IN U. S. A.
AMERICAN SOCIETY FOR TESTING AND MATERIALS
1916 RACE ST., PHILADELPHIA 3, PA.

THE OKONITE COMPANY
Paterson, New Jersey 07446

PROPERTIES OF POLYBUTENE PIPE OIL

LOW VISCOSITY GRADE

PROPERTIES	ASTM METHOD	REQUIREMENT
A. Physical		
Specific Gravity (60/60F)	D-1298	0.80 - 0.84
Flash Point, °F	D-92	265 Min.
Pour Point, °F	D-97	-45 Max.
Viscosity, SSU	D-446	
@ 100 F		115 - 160
@ 210 F		38 - 46
Color		
Initial	D-1500	1 Max.
After 96 hrs. @ 115 C	D-1934	1.5 Max.
Coefficient of Expansion		0.00061/°C
B. Chemical		
Neutralization No., mg KOH/g		
Initial	D-664	0.02 Max.
After 96 hrs. @ 115 C	D-1934	0.09 Max.
Chlorine		
Organically Bound, %, Wt.	SM-205-12	0.004 Max.
Inorganic Chlorides	D-878	Nil
Sulphur, Free	D-989	Nil
Sulphur, Total, %, Wt.	D-1552	0.01 Max.
Water Content, ppm	D-1533	30 Max.
C. Electrical		
Dielectric Strength, kV @ 25 C	D-877	35 Min.
% Power Factor (100 tan δ), 60 Hz, 100 C		
Initial	D-924	0.05 Max.
After 96 hrs. @ 115 C	D-1934	0.10 Max.

AMERICAN STANDARD
A.S.A. NO.: Z11.79

A.S.T.M. STANDARD VISCOSITY-TEMPERATURE CHARTS FOR LIQUID PETROLEUM PRODUCTS (D 341)

CHART B: SAYBOLT UNIVERSAL VISCOSITY, ABRIDGED

TEMPERATURE vs VISCOSITY

for

LOW VISCOSITY POLYBUTENE OIL

used in

OILOSTATIC CABLE SYSTEMS

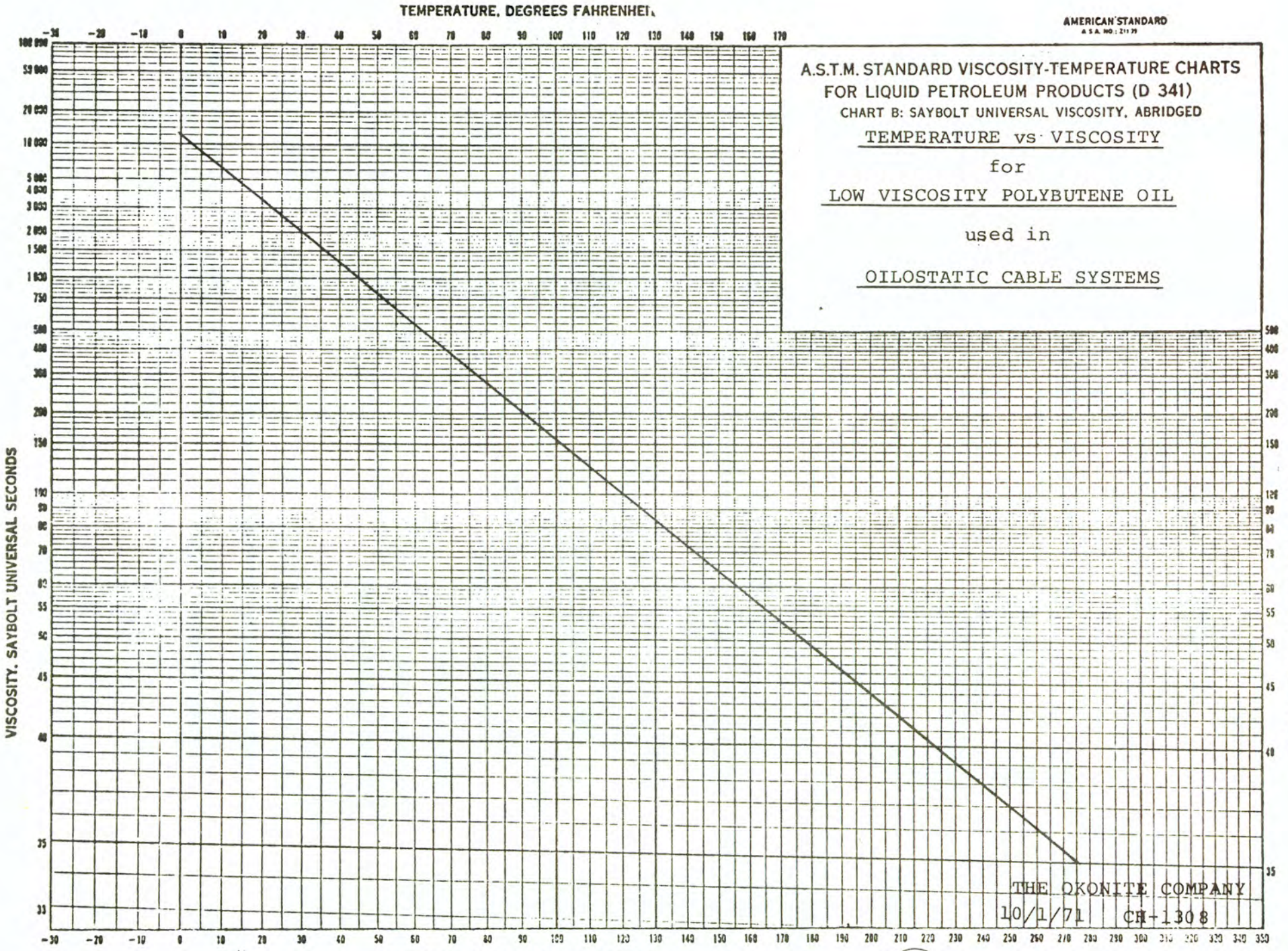

THE OKONITE COMPANY

10/1/71 CH-1308

PRINTED IN U. S. A.

COPYRIGHT BY
AMERICAN SOCIETY FOR TESTING AND MATERIALS
1916 RACE ST., PHILADELPHIA 3, PA.

THE OKONITE COMPANY

PROPERTIES OF SUN #6 PIPE OIL

PROPERTIES	ASTM METHOD	REQUIREMENT
A. Physical		
Gravity, API @ 60 F	D-287	19.5 - 21.5
Specific Gravity (60/60 F)	D-1298	0.920 - 0.940
Flash Point, °F	D-92	380 Min.
Pour Point, °F	D-97	-5 Max.
Viscosity, SSU	D-445 - 446	
@ 100 F		750 - 800
@ 210 F		58 - 63
Color	D-1500	2 Max.
Coefficient of Expansion	---	.00072/°C
B. Chemical		
Neutralization No., mg KOH/g	D-974	
Initial		0.05 Max.
After 96 hrs. @ 115 C		0.10 Max.
Inorganic Chlorides and Sulfates	D-878	Nil
Sulfur, Free	D-989	Nil
Sulfur, Total, %, Wt.	D-129	0.35 Max.
Water Content, ppm	D-1533	30 Max.
C. Electrical		
Dielectric strength, kV @ 25 C	D-877	30 Min.
% Power factor (100 tan δ), 60 Hz, 100 C		
Initial		0.6 Max.
After 96 hrs. @ 115 C		2.8 Max.
Resistivity, ohm-cms x 10^{12} @ 100 C	D-1169	
Initial		2.5 Min.
After 96 hrs. @ 115 C		0.5 Min.

11/[illegible]/73

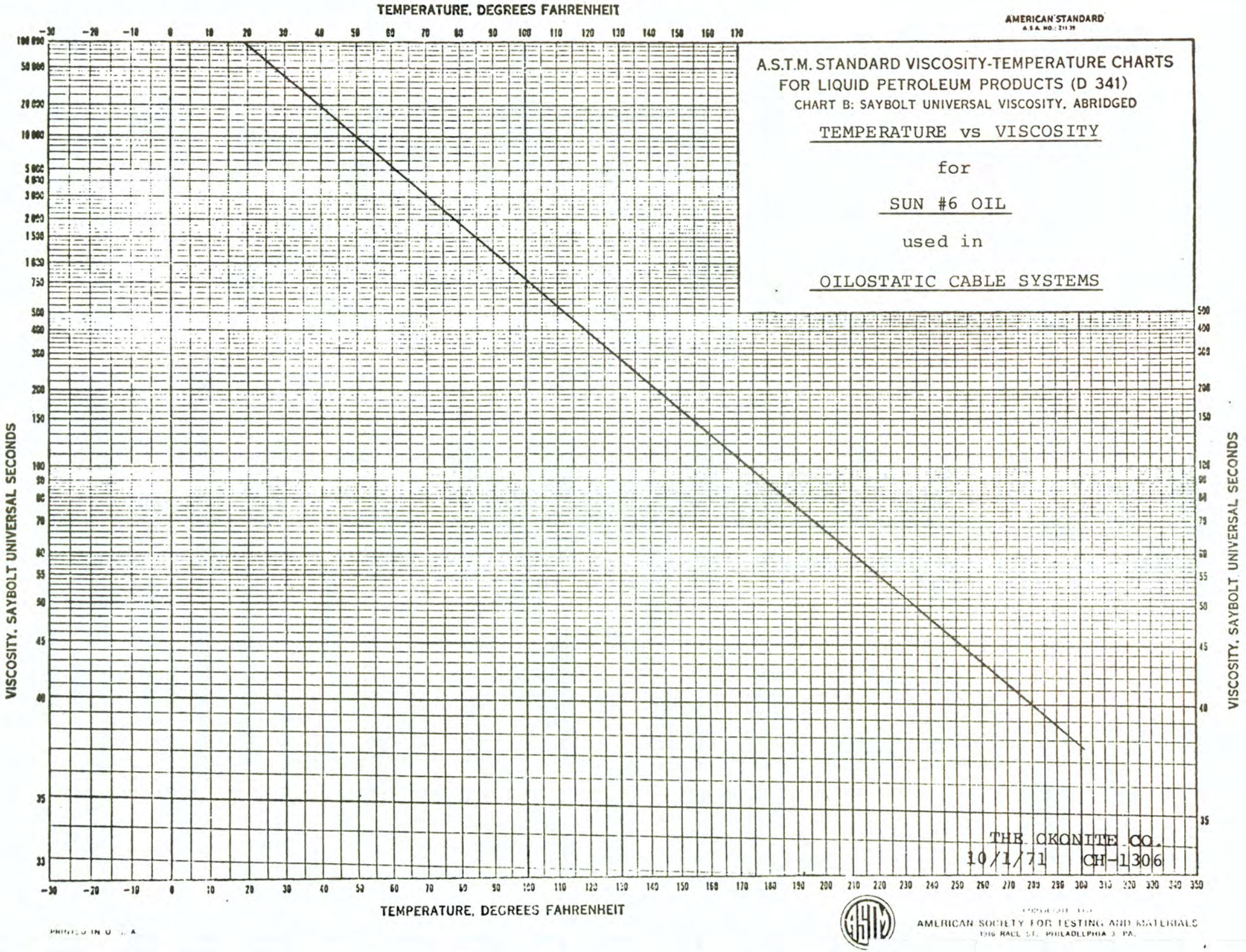
TEMPERATURE, DEGREES FAHRENHEIT
AMERICAN STANDARD
A.S.A. NO.: Z11.19
A.S.T.M. STANDARD VISCOSITY-TEMPERATURE CHARTS
FOR LIQUID PETROLEUM PRODUCTS (D 341)
CHART B: SAYBOLT UNIVERSAL VISCOSITY, ABRIDGED
TEMPERATURE vs VISCOSITY
for
SUN #6 OIL
used in
OILOSTATIC CABLE SYSTEMS
VISCOSITY, SAYBOLT UNIVERSAL SECONDS
THE OKONITE CO.
10/1/71 CH-1306
TEMPERATURE, DEGREES FAHRENHEIT
PRINTED IN U. S. A.
AMERICAN SOCIETY FOR TESTING AND MATERIALS
1916 RACE ST. PHILADELPHIA 3, PA.

THE OKONITE COMPANY
Ramsey, New Jersey 07446

PROPERTIES OF SUN #4 LOW VISCOSITY OIL

PROPERTIES	ASTM METHOD	REQUIREMENT
A. Physical		
Gravity, API @ 60 F	D-287	24.5 - 26.5
Specific Gravity (60/60 F)	D-1250	0.896 - 0.907
Flash Point, °F	D-92	295 Min.
Pour Point, °F	D-97	-40 Max.
Viscosity, SSU	D-2161	
@ 100 F		55 - 60
@ 210 F		32 - 36
Color	D-1500	1.0 Max.
Coefficient of Expansion	---	.00072/°C
B. Chemical		
Neutralization No., mg KOH/g	D-974	
Initial		0.03 Max.
After 96 hrs. @ 115 C		0.10 Max.
Inorganic Chlorides and Sulfates	D-878	Nil
Sulfur, Free	D-989	Nil
Sulfur, Total, %, Wt.	D-2622	0.35 Max.
Water Content, ppm	D-1533	30 Max.
C. Electrical		
Dielectric Strength, kV @ 25 C	D-877	30 Min.
% Power Factor (100 tan δ), 60 Hz, 100 C	D-924	0.3 Max.
Resistivity, ohm-cms x 10^{12} @ 100 C	D-1169	2.5 Min.

8/31/76

AMERICAN STANDARD

A.S.T.M. STANDARD VISCOSITY-TEMPERATURE CHARTS FOR LIQUID PETROLEUM PRODUCTS (D 341)

CHART B: SAYBOLT UNIVERSAL VISCOSITY, ABRIDGED

TEMPERATURE vs VISCOSITY

for

SUN #4 OIL

used in

OILOSTATIC CABLE SYSTEMS

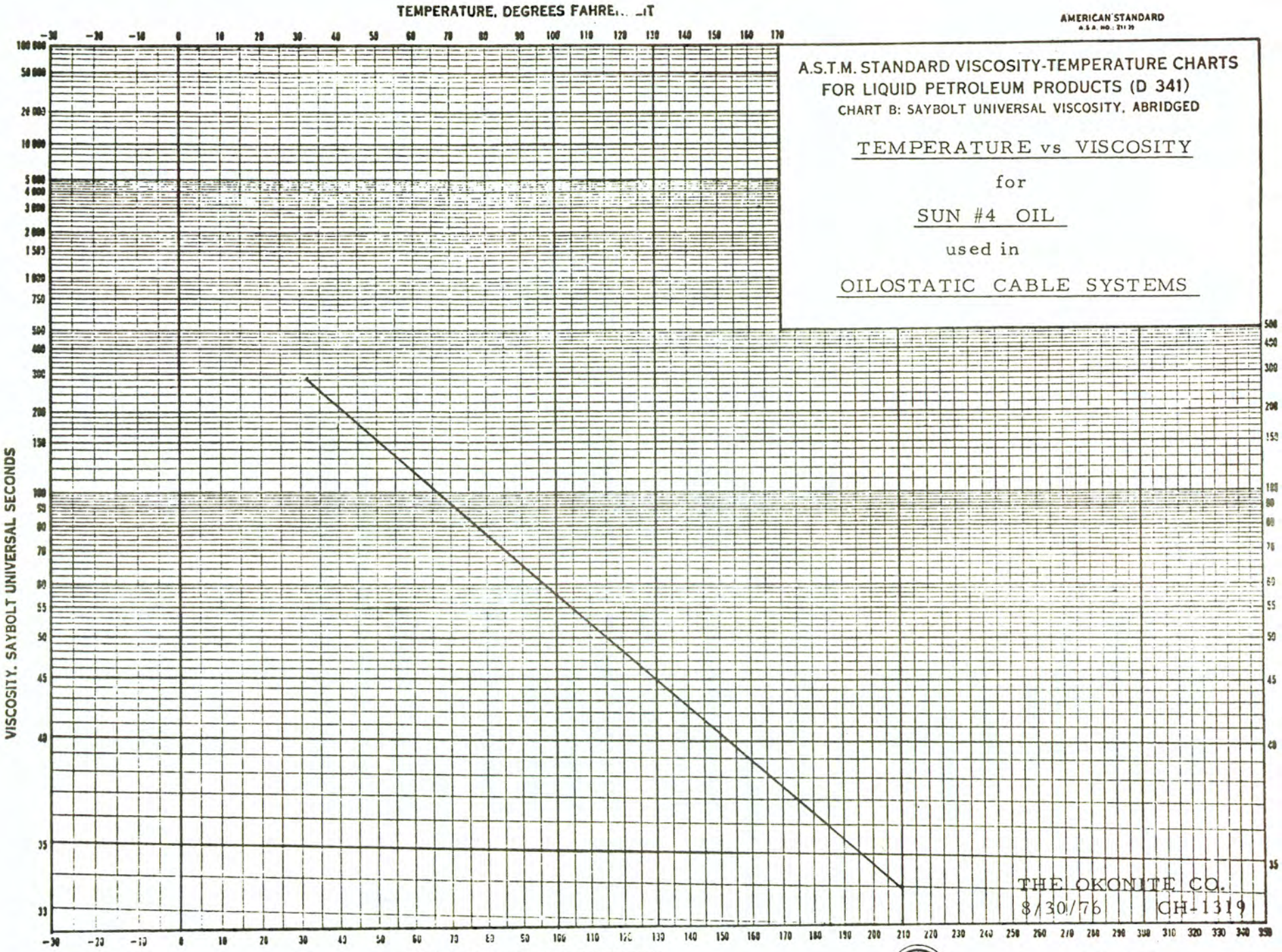

COPYRIGHT 1973
AMERICAN SOCIETY FOR TESTING AND MATERIALS
1916 RACE ST., PHILADELPHIA, PA.

SECTION 7

EVACUATION AND THE FILLING OF PIPE LINE WITH OIL

EVACUATION

1.

After all the joints, terminations, potheads, pumping plant, storage tank and associated piping have been completed, the system is ready to be evacuated and filled with the pressure medium (oil).

2.

The evacuation procedure on the storage tank, associated interconnecting piping and the pumping plant is a separate operation. Before vacuum treatment the permanent oil storage tanks should be inspected. At this time check the magnetic oil level gauge to see if it is functioning properly. Vacuum treatment is applied until 500 microns or less is obtained, followed by a 1/2 hour vacuum drop test. The system is considered acceptable if the rise in pressure is 250 microns or less in this 1/2 hour period.

3.

Before the line is filled with oil, it shall be evacuated. The number of vacuum pumps needed for the above depends upon the length of the line, size of pumps and the free area of the pipe. One pump should be located at the highest point of the line at the valve in the joint and another vacuum pump should be placed at the spreader heads or in terminating joint manholes at the extreme end of the line. Vacuum lines shall also be connected to the tops of the potheads. The pipe, joints, terminations, and potheads shall be evacuated to an absolute pressure of 250 microns or less. After reaching 250 microns, the vacuum pump shall be kept running for a minimum of 8 additional hours. Vacuum readings shall be taken at the end remote from the end where the vacuum pump is located. At the end of the 8-hour pumping period, the vacuum pumps shall be isolated from the system and a one hour vacuum drop test run. If the rise in pressure exceeds 250 microns for the one-hour period, the entire vacuum treatment and drop test shall be repeated. If the drop test is acceptable, the system is then ready to fill with oil.

FILLING THE PIPE LINE WITH OIL:

For short lines, the treated oil delivered to the job site can first be pumped into the evacuated storage tank, and then pumped into the line by the control plant pumps. This procedure is normally used only where circuit lengths are small and oil volume is small (approximately 5,000 gallons).

For circuits other than the above, the treated oil is pumped directly into the pipe line from supply tank cars or tank trucks. No air should be allowed to come into contact with the oil. Nitrogen gas, meeting the attached specification, should be applied and maintained at slight positive pressure (approximately 2 psi) above the surface of the oil in the tank cars or tank

trucks during storage, waiting, and pumping times. Nitrogen at same pressure should be fed into the tank cars or tank trucks as they are pumped out.

In cold weather, the oil should be heated before pumping into the system. For rail cars equipped with steam coils, the coils should be tested with dry nitrogen gas at approximately 50 psi to insure tightness before introducing steam into the coils.

Before oil is admitted into the system, samples shall be taken from the delivering tank cars or tank trucks and tested for dielectric strength, which should be 30 kV or higher.

Oil should be preferably pumped into the system from the lowest end of the system if this is at all possible. Vacuum pumps should be turned on and kept running while the circuit is being filled with oil. The oil pumping rate should not exceed 50 gallons per minute.

During the oil filling operation, care must be taken to assure that the oil pressure differential at the pothead baseplate glands is kept within the pothead manufacturer's recommendations (refer to the pothead instruction booklet for the allowable value). Pressure gauges should be installed at the terminations to monitor the pressure.

After the line has been filled with oil and the storage tank filled to a predetermined value (usually about 1/2 to 5/8 full), apply 6 psi nitrogen above the oil in the storage tank. The line should then be slowly pressurized using the following step-by-step procedure.

Increase pressure at pumping plant to approximately 25 psi and leave at this oil pressure for 8 hours minimum.

Increase pressure to approximately 50 psi and leave at this pressure for 8 hours minimum.

Increase pressure to approximately 100 psi and leave at this pressure for 8 hours minimum.

Increase pressure up to normal (usually 200 psi) system pressure.

About 1 to 2 gallons of oil should be slowly bled from each pothead, and about 5 gallons slowly bled from each joint and spreaderhead. The oil should be checked for dielectric strength at these locations.

All questions pertaining to the hookup of temporary equipment or evacuating and filling the system, testing, etc. can be referred to Okonite Field Advisor and/or customer's Engineering Department representative.

CAUTION: No one should be allowed to enter the tank cars or tank trucks where nitrogen is present.

THE ENCLOSED OKONITE DRAWINGS AND INSTALLATION INSTRUCTIONS ARE THE PROPERTY OF THE OKONITE COMPANY AND ARE MADE AVAILABLE TO YOU AT NO COST TO AID AND ASSIST YOU IN THE PREPARATION AND/OR EVALUATION OF SPECIFICATIONS, BIDS, AND THE LIKE WHICH UTILIZE OILOSTATIC CABLE SYSTEMS. ANY OTHER USE OF THESE DRAWINGS AND INSTALLATION INSTRUCTIONS IS PROHIBITED WITHOUT THE EXPRESS WRITTEN CONSENT OF THE OKONITE COMPANY.